higher education & training

Department:
Higher Education and Training
REPUBLIC OF SOUTH AFRICA

MARKING GUIDELINE

NATIONAL CERTIFICATE

COMMUNICATION-ELECTRONICS N5

31 March 2020

This marking guideline consists of 6 pages.

Copyright reserved

QUESTION 1

1.1 True
1.2 True
1.3 False
1.4 True
1.5 True
1.6 True
1.7 False
1.8 False
1.9 True
1.10 True

(10 × 1) **[10]**

QUESTION 2

2.1 2.1.1 (a) Z = R = Minimum

(b) $X_L = X_C$

(c) Current = Maximum (6)

2.1.2 (a) Z = L/RC = Maximum

(b) $X_L = X_C$

(c) Current = Minimum (6)

2.2 2.2.1

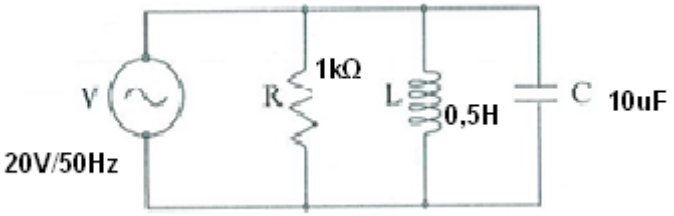

(2)

2.2.2 (a) $I_R = \frac{100}{100}$✓ = 0,1 A✓

$I_L = \frac{V}{X_L}$

$= \frac{100}{2\pi \times 50 \times 0,5}$✓

= 0, 673 A✓

$I_C = \frac{V}{X_C}$

$= \frac{100 \times 2\pi \times 50 \times 10}{10^6}$✓

= 0,314 A✓

$I_x = I_L - I_C$

= 0, 673 – 0, 314✓

= 0, 323 A✓

$I_T = \sqrt{I_R^2 + I_x^2}$

$= \sqrt{0,1^2 + 0,323^2}$ ✓

= 0,338 A✓ (10)

(b) $\Theta = \tan^{-1} \frac{I_x}{I_R}$

$= \tan^{-1} \frac{0,323}{0,1}$✓

= 72º46✓ (2)

2.2.3

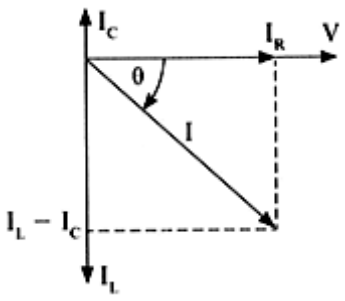

(2)
[28]

QUESTION 3

3.1 $Zo = \sqrt{Zoc.Zsc}$

$Zoc = Z1 + Z2 = 10 + 40 = 50\ \Omega$✓✓

$Zsc = Z1 + \frac{Z1 \times Z2}{Z1 + Z2} = 10 + \frac{10 \times 40}{10+40}$✓

$= 10 + 8$✓ $= 18\ \Omega$✓✓

$Zo = \sqrt{Zoc.Zsc} = \sqrt{50 \times 18}$✓ $= 30\ \Omega$✓✓ (9)

3.2 It can be converted to a balanced network by inserting resistors into the series arms, which have a value of arm resistor halved connected in series. (3)

[12]

QUESTION 4

4.1 $L = \frac{Ro}{4\pi Fc} = \frac{600}{4\pi \times 15000}$✓

$= 3{,}18$ mH✓✓ (3)

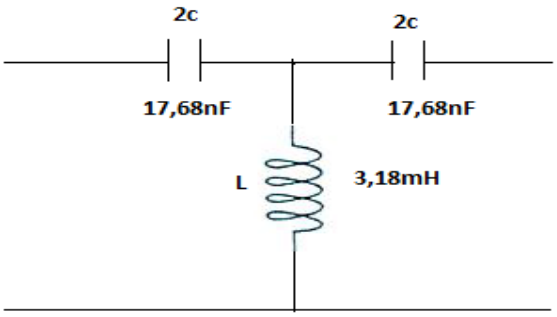

T-type high pass filters✓✓✓ (3)

$C = \frac{1}{4\pi RoFc}$

$= \frac{1}{4\pi \times 600 \times 15000}$✓

$= 8{,}84$nF✓✓ (3)

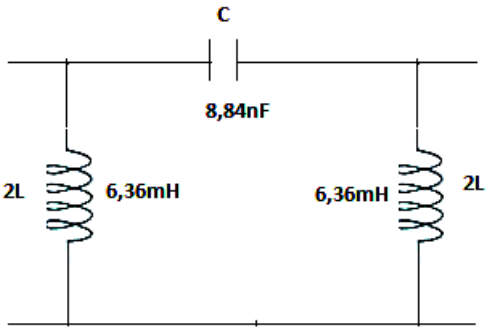

π-type high pass filters✓✓✓ (3)

4.2

$$Fc = \frac{1}{\pi\sqrt{LC}} \checkmark$$

$$= \frac{1}{\pi\sqrt{0.5\ x\ 40x10^{-6}}} \checkmark$$

= 71,17Hz✓ (3)
[15]

QUESTION 5

5.1 FM transmitter automatic frequency control module (1)

5.2 A – Reactance tube
B – Modulator oscillator
C – 1st Harmonic generator amp
D – 2nd Harmonic generator amp
E – Mixer
F – FM discriminator
G – DC amp

(7 × 2) (14)
[15]

QUESTION 6

6.1 Radiation efficiency of the antenna can be improved when two wires are bent so as to be in the same line because the electric and magnetic field become fully coupled to the surrounding space instead of being confined between the two wires. (4)

6.2 6.2.1 It refers to the frequency range over which operation satisfactory, and is taken between the half-power points.

6.2.2 It refers to the angular separation between the two half-power points on the power density radiation pattern.

(2 × 3) (6)
[10]

QUESTION 7

7.1 They are used to improve the accuracy of bandwidths and also to provide amplifier stability. (4)

7.2
- If zero/pole appears on the left, the bode plot will be for an ordinary stable work.
- If zero/pole appears on the right, the bode plot will indicate for an unstable work. (2 × 3) (6)

[10]

TOTAL: 100

Copyright reserved