higher education & training

Department:
Higher Education and Training
REPUBLIC OF SOUTH AFRICA

T390**(E)**(M28)T

NATIONAL CERTIFICATE

COMMUNICATION-ELECTRONICS N5

(8080235)

28 March 2019 (X-Paper)
09:00–12:00

This question paper consists of 6 pages.

Copyright reserved

DEPARTMENT OF HIGHER EDUCATION AND TRAINING
REPUBLIC OF SOUTH AFRICA

NATIONAL CERTIFICATE
COMMUNICATION-ELECTRONICS N5
TIME: 3 HOURS
MARKS: 100

INSTRUCTIONS AND INFORMATION

1. Answer ALL the questions.
2. Read ALL the questions carefully.
3. Number the answers according to the numbering system used in this question paper.
4. Write neatly and legibly.

Copyright reserved

QUESTION 1

1.1 What is understood by the term *selectivity* as applied to electronic circuits? (3)

1.2 An inductor with a Q-factor of 100 and a DC resistance of 100 Ω is connected in series with a capacitor and a 10 mV AC supply.

If the frequency of operation is 455 kHz and a constant current of 0,1 A is required, calculate the following circuit parameters:

1.2.1 Voltage drop across the capacitor (5)

1.2.2 Inductance value (3)

1.3 Refer to FIGURE 1 and do the following for a supply current of 50 A ∠ 300:

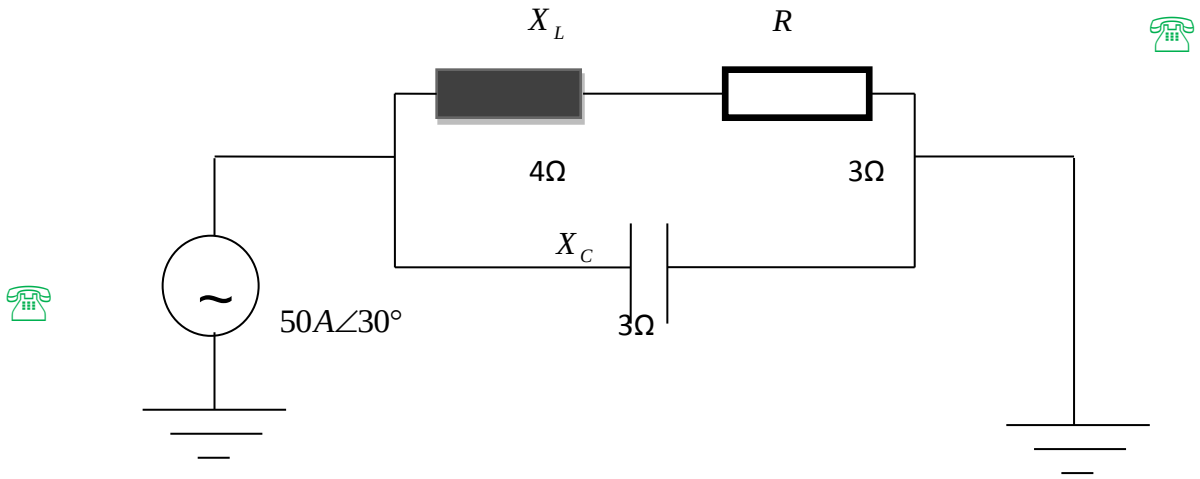

FIGURE 1

1.3.1 Calculate I_{LR} (6)

1.3.2 Determine I_C (5)

[22]

QUESTION 2

Determine the following parameters for the circuit shown in FIGURE 2. The two coils have a mutual inductance of 7,35 μH :

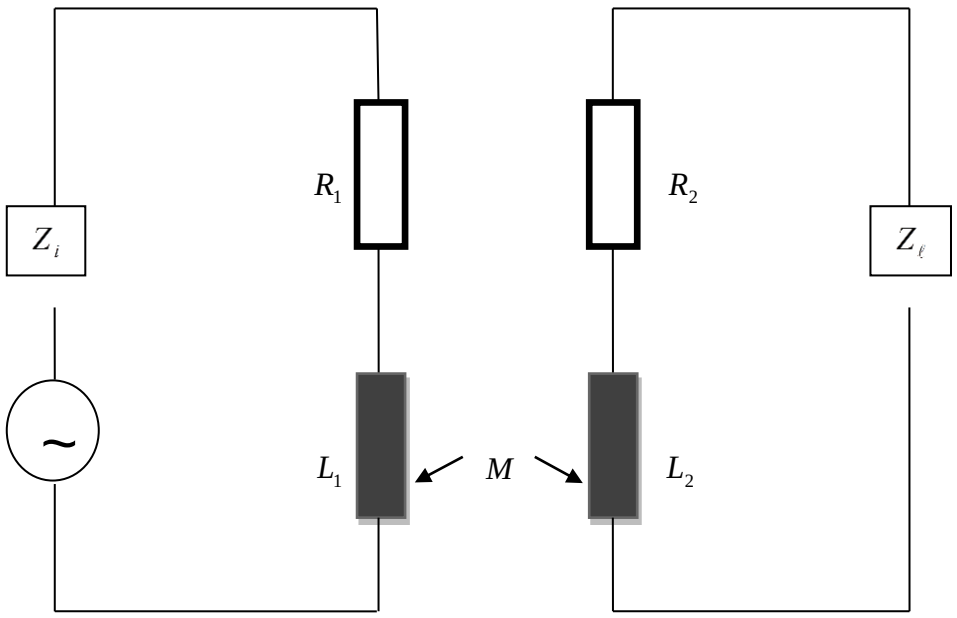

$$Z_i = 2 - \left[\frac{j}{2\pi f \times 500\,pF}\right] \qquad Z_\ell = 12 - \left[\frac{j}{2\pi f \times 120\,pF}\right]$$

$$Z_1 = 2 + j2\pi f \times 120\mu H \qquad Z_2 = 18 + j2\pi f \times 500\mu H$$

FIGURE 2

2.1 Quality factors Q_P and Q_S (6)

2.2 Critical coupling coefficient (2)

2.3 Actual coupling coefficient (2)

[10]

QUESTION 3

3.1 Draw and label a circuit that will suppress all frequencies above 4,3 kHz. The circuit must be of the π-type with an impedance of 600 Ω. (12)

3.2 Make simple, labelled sketches to represent the following filters in terms of impedance. Write the equations for the series and shunt impedances below each sketch:

3.2.1 π-type low-pass filter

3.2.2 π-type high-pass filter

3.2.3 T-type low-pass filter

(3 × 4) (12)
[24]

QUESTION 4

A symmetrical T-type network gives the following readings:

An open-circuit impedance of 400 ohms and a short-circuit impedance of 300 ohms

Derive the equation for the shunt and series impedance and draw the network, indicating its impedance values. **[15]**

QUESTION 5

Use simple sketches to represent the frequency spectrum of the RF signal of an AM transmitter when the following are transmitted:

5.1 RF carrier and both sidebands (3)

5.2 Upper sideband only (1)

5.3 Upper and lower sidebands without the carrier (2)

5.4 RF carrier only (1)
[7]

QUESTION 6

Name any FM demodulator and draw a labelled diagram of the circuit. **[12]**

Copyright reserved

QUESTION 7

7.1 Make a neat, labelled sketch of a Yagi antenna consisting of THREE elements. (6)

7.2 Define each of the following terms:

7.2.1 Impedance matching

7.2.2 Resonant antenna

(2 × 2) (4)

[10]

TOTAL: 100

Copyright reserved