higher education & training

Department:
Higher Education and Training
REPUBLIC OF SOUTH AFRICA

MARKING GUIDELINE

NATIONAL CERTIFICATE

COMMUNICATION-ELECTRONICS N5

27 MARCH 2018

This marking guideline consists of 10 pages.

Copyright reserved

QUESTION 1: ALTERNATING CURRENT NETWORKS

1.1 1.1.1

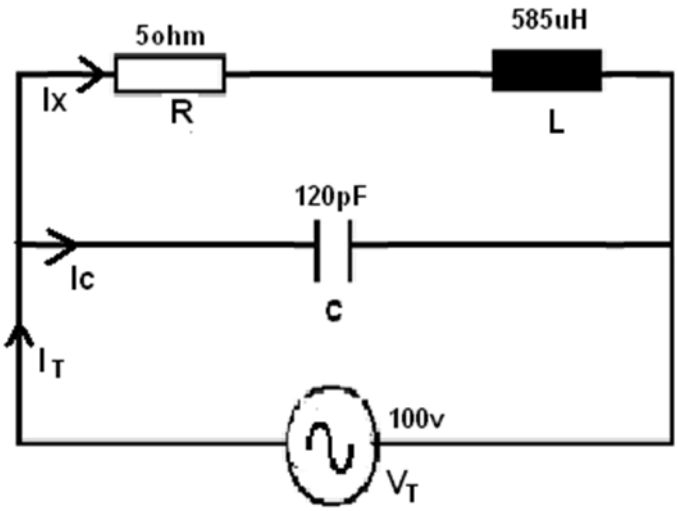

(2)

1.1.2 Zd = $\frac{L}{CR}$

= $\frac{585 \text{ x } 10^{-6}}{120 \text{ x} 10^{-12} \text{x } 5}$

= 975 KΩ (2)

1.1.3 Q = $\frac{1}{R}\sqrt{\frac{L}{C}}$

= $\frac{1}{5}\sqrt{\frac{585 \text{ x } 10^{-6}}{120 \text{ x} 10^{-12}}}$

= 442 (2)

1.1.4 Ic = IQ

But i = $\frac{V}{\text{Zd}}$

i.e = $\frac{100}{975}$

= 102,56 µA

Ic = $102{,}56 \text{ x } 10^{-6}$ x 442

= 45 mA

(5)

1.1.5 Fr = $\frac{1}{2\pi\sqrt{LC}}$

= $\frac{1}{2\pi\sqrt{585\ x10^{-6}x\ 120x10^{-12}}}$

= 601 KHz (2)

1.2 Q = $\frac{XL}{R}$

And XL = 2πfL

= 2π x $601\ x10^{3}$x $585\ x\ 10^{-6}$

= 2209, 36 Ω

Q = $\frac{XL}{R}$

= $\frac{2209,36}{5}$

= 441, 81 = 442 (4)

1.3 The coefficient of coupling expresses the degree of coupling between the primary and secondary and is the ratio of mutual inductance to maximum inductance. (3)

1.4 1.4.1 (a) primary (b) impedance (c) coupled (d) reflected (4)

1.4.2 (e) voltage (f) current (g) lags (3)

1.4.3 (h) secondary (i) induced (j) winding (3)
[30]

QUESTION 2: FOUR-TERMINAL NETWORKS

Looking in from R1

$$R1 = RA + \frac{RB \times R2}{RB + R2} \quad (1)$$

Multiply by the common denominator RB + R2

$$R1\,(RB + R2) = RA\,(RB + R2) + RB.\,R2$$

$$R1RB + R1R2 = RARB + RAR2 + RB.\,R2 \ldots\ldots\ldots\ldots Eq.\ 1 \quad (2)$$

Looking in from R2

$$R2 = \frac{RB(R1 + RA)}{RB + (R1 + RA)}$$

$$R2 = \frac{RBR1 + RARB}{RB + R1 + RA} \quad (2)$$

Multiply by the common denominator RB + R1 + RA

$$R2\,(RB + R1 + RA) = R1RB + RARB$$

$$R2\,RB + R1\,R2 + R2RA = R1RB + RARB \ldots\ldots\ldots\ldots\ldots\ldots Eq.\ 2 \quad (2)$$

Adding Eq.1 and Eq.2

$$R1RB + R1R2 = RARB + RAR2 + RB.\,R2$$

$$R2\,RB + R1\,R2 + R2RA = R1RB + RARB$$

$$2\,R1\,R2 + R1RB + R2\,RB + R2RA = 2\,RARB + RAR2 + R1RB + RB.\,R2$$

$$\therefore 2\,R1\,R2 = 2\,RARB$$

$$R1\,R2 = \frac{2RARB}{2}$$

$$R1\,R2 = RARB$$

$$\text{Hence } RA = \frac{R1R2}{RB} \quad (5)$$

Substituting $\frac{R_1R_2}{R_B}$ for R_A in Eq.1

$$R_1R_B + R_1R_2 = R_AR_B + R_AR_2 + R_B.R_2 \ldots.\text{Eq.1.}$$

$$\therefore R_1R_2 + R_1R_B = \left(\frac{R_1R_2}{\cancel{R_B}}\right)\cancel{R_B} + \left(\frac{R_1R_2}{R_B}\right)R_2 + R_B.R_2$$

$$R_1R_2 + R_1R_B = R_1R_2 + \frac{R_1R_2^2}{R_B} + R_B.R_2 \quad (4)$$

Multiply by denominator R_B

$$R_B(R_1R_2 + R_1R_B) = R_B(R_1R_2) + \frac{R_B}{1}\left(\frac{R_1R_2^2}{R_B}\right) + (R_B.R_2)R_B$$

$$\cancel{R_BR_1R_2} + R_1R_B^2 = \cancel{R_BR_1R_2} + R_1R_2^2 + R_2R_B^2$$

$$R_1R_B^2 = R_1R_2^2 + R_2R_B^2$$

$$R_1R_B^2 - R_2R_B^2 = R_1R_2^2 \quad (3)$$

Taking the common factor R_B^2

$$R_B^2(R_1 - R_2) = R_1R_2^2$$

$$\therefore R_B^2 = \frac{R_1R_2^2}{R_1 - R_2}$$

$$\text{Then } R_B = \sqrt{\frac{R_1R_2^2}{R_1 - R_2}} \quad (2)$$

Copyright reserved

To find RA divide: $RA = \frac{R1R2}{RB}$

$$\therefore RA = \frac{R1 - R2}{\sqrt{\frac{R1R2^2}{R1-R2}}}$$

$$= \frac{R1\ R2}{\sqrt{R1R2^2}} \div \frac{1}{\sqrt{R1-R2}}$$

$$= \frac{R1\ R2}{\sqrt{R1R2^2}} \times \frac{\sqrt{R1-R2}}{1}$$

$$= \frac{R1\ \cancel{R2}}{\cancel{R2}\sqrt{R1}} \times \frac{\sqrt{R1-R2}}{1}$$

$$= \frac{R1}{\sqrt{R1}} \times \frac{\sqrt{R1-R2}}{1}$$

$$= \frac{\sqrt{R1}\ .\sqrt{R1}}{\sqrt{R1}} \times \frac{\sqrt{R1-R2}}{1}$$

$$= \frac{(\sqrt{R1}\ .\cancel{\sqrt{R1}})}{\cancel{\sqrt{R1}}} \times \frac{\sqrt{R1-R2}}{1}$$

$$= \sqrt{R1} \times \sqrt{R1-R2}$$

$$RA = \sqrt{R1(R1-R2)}$$

(9)
[30]

Copyright reserved

QUESTION 3: FILTERS

3.1

$$L = \frac{Ro}{4\pi Fc}$$

$$= \frac{600}{4\pi \text{ x } 15000}$$

= 3,18 mH

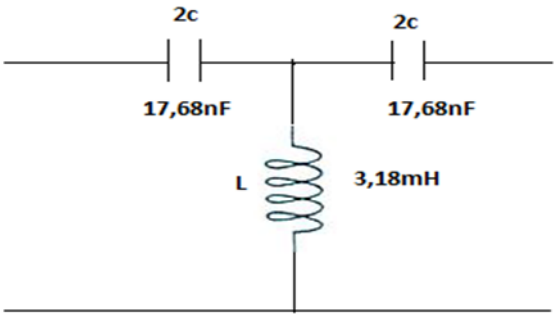

$$C = \frac{1}{4\pi RoFc}$$

$$= \frac{1}{4\pi \text{ x } 600 \text{ x } 15000}$$

= 8,84nF

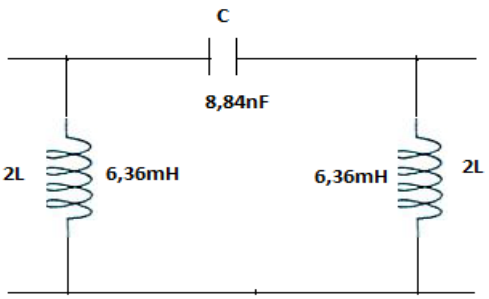

(8)

3.2

$$\frac{c}{2} = 20\,\mu\text{F}$$

$$\therefore C_T = 40\,\mu\text{F}$$

$$f_c = \frac{1}{\pi\sqrt{LC}}$$

$$= \frac{1}{\pi\sqrt{0{,}1x0{,}00004}}$$

$$= 159{,}15\ \text{Hz} \quad (2)$$

[10]

QUESTION 4: RECEIVERS AND TRANSMITTERS

4.1 4.1.1 Carrier rotation (1)

4.1.2 Carrier stationary (1)

4.2
A Vc
B USF
C LSF
D Wc + Wm
E Wc – Wm
F Wm
G Wm
H Vc (8)

4.3 4.3.1
- Simplifies the equipment of transmitter and receiver
- Reduces cost of receiver
- Uses a simple envelope detector in the receiver

4.3.2
- Expensive and sophisticated equipment
- Less transmission power
- Narrow bandwidth

(2 × 3) (6)

4.4 $$mf = \frac{\text{Maximum Deviation } (\Delta)}{\text{Modulation Frequency}(Fm)}$$

$$= \frac{15}{5}$$

$$= 3$$

∴ Bandwidth = modulation frequency × number of sidebands × 2

= 5 × 6 × 2

= 60 KHz (4)
[20]

QUESTION 5: ANTENNAS

5.1
- The half-wave dipole is very unstable for HF, VHF and UHF.
- At lower frequencies the physical dimension of the aerial of the half- wave dipole is too large. (2)

5.2 Effective aperture is the physical dimensions of the antenna which determine the power received by an antenna and is directly proportional to the collecting area of the antenna. (3)
[5]

QUESTION 6: BODE PLOTS

6.1
- Integrator
- Differentiator (2)

6.2 Both circuits are used to determine an approximation of the frequency and phase response of RC circuits. (3)
[5]

TOTAL: 100

Copyright reserved