higher education & training

Department:
Higher Education and Training
REPUBLIC OF SOUTH AFRICA

T300(**E**)(A5)T
AUGUST EXAMINATION

NATIONAL CERTIFICATE

COMMUNICATION ELECTRONICS N5

(8080235)

5 August 2014 (Y-Paper)
13:00–16:00

Calculators may be used.

This question paper consists of 5 pages and 5 formula sheets.

ENGINEERING

Copyright reserved

DEPARTMENT OF HIGHER EDUCATION AND TRAINING
REPUBLIC OF SOUTH AFRICA

NATIONAL CERTIFICATE
COMMUNICATION ELECTRONICS N5
TIME: 3 HOURS
MARKS: 100

ENGINEERING

INSTRUCTIONS AND INFORMATION

1. Answer ALL the questions.
2. Read ALL the questions carefully.
3. Number the answers according to the numbering system used in this question paper.
4. Ensure that your diagrams are clearly labelled.
5. Keep questions and subsections of questions together.
6. Rule off on completion of EACH answer.
7. Consider the following TWO examples regarding the use of units in calculations:

   7.1 INCORRECT: $V = IR = 10 \times 2 = 20$

   7.2 CORRECT: $V = IR = (10\ A) \times (2\ \Omega) = 20\ V$

8. Write neatly and legibly.

Copyright reserved

QUESTION 1

Draw the circuit diagram of a parallel RLC circuit with a supply voltage of 100 V and a frequency of 50 Hz connected to it. The circuit consists of a 1 000 Ω resistor, a 0,5 H coil and a capacitor of 10 μF connected in parallel.

1.1 Draw the circuit. (3)

1.2 Calculate the following:

1.2.1 Total current flowing through the circuit (5)

1.2.2 Phase angle (3)

1.2.3 Draw the phasor-diagram (5)

1.3 Use any method to derive the equation for the resonance frequency of a parallel resonant circuit. (4)
[20]

QUESTION 2

Briefly describe the function of each of the following electronic circuits:

2.1 Demodulator

2.2 Modulator

2.3 Buffer amplifier

2.4 Attenuator

2.5 Filter

2.6 Transmitting antenna

2.7 Receiving antenna

2.8 Amplifier

2.9 AGC

2.10 L-type attenuator

(10 × 1) **[10]**

ENGINEERING

Copyright reserved

QUESTION 3

3.1 Explain the THREE requirements of an attenuator in a network. (3)

3.2 Design an L–type attenuator circuit for matching a 100 Ω microphone to an amplifier with an input impedance of 50 Ω.

Draw the attenuator circuit and insert ALL the calculated values. (7)
[10]

QUESTION 4

Derive the equation for the Q–factor of a coil from first principle. **[12]**

QUESTION 5

Design a prototype T and π high pass filters with a cut-off frequency of 15 kHz and a design impedance of 600 Ω. The filter must pass ALL the frequencies ABOVE cut-off. **[16]**

QUESTION 6

Draw a neat, labelled block diagram of a typical FM transmitter. **[12]**

QUESTION 7

An AM transmitter has an output of 24 Kw when modulated to a depth of 100%.

Determine the power output of a carrier under the following conditions:

7.1 Unmodulated (6)

7.2 Modulated to a depth of 60% with ONE sideband suppressed and the carrier component reduced by 26 dB. (6)
[12]

ENGINEERING

Copyright reserved

QUESTION 8

Define the following concepts:

8.1 Antenna losses

8.2 Radiation resistance

8.3 Antenna efficiency

8.4 Directive gain

(4 × 2) **[8]**

TOTAL: 100

ENGINEERING

Copyright reserved

COMMUNICATION-ELECTRONICS N5

FORMULA SHEET

Any applicable formula may also be used.

Inductive Reactance

$$X_L = 2\pi fL$$

Capacitive Reactance

$$X_c = \frac{1}{2\pi\ fC}$$

Series formulae

$$Z_T = \sqrt{R^2 + (X_L - X_c)^2}$$

$$\tan\theta = \frac{X_L - X_c}{R}$$

$$BW = \frac{f_o}{Q} = \frac{R}{2\pi\ L}$$

$$p.f = Cos\phi$$

$$P = VICos\phi$$

$$Y = \frac{1}{Z} = G \pm jB$$

Parallel formulae

$$I_T = \sqrt{I_R^2 + (I_C - I_L)^2}$$

$$\tan\theta = \frac{I_C - I_L}{I_R}$$

$$I_X = I_C - I_L$$

$$p.f = Cos\phi$$

$$P = VICos\phi$$

$$Y_T = Y_1 + Y_2$$

Series resonance

$$f_r = \frac{1}{2\pi\sqrt{LC}}$$

$$Z = R$$

$$\phi = 0^\circ$$

$$p.f = Cos\phi = 1$$

$$Q = \frac{X_L}{R} = \frac{X_C}{R} = \frac{1}{R}\sqrt{\frac{L}{C}}$$

Parallel resonance

$$f_r = \frac{1}{2\pi}\sqrt{\frac{1}{LC} - \frac{R^2}{L^2}}$$

$$Z_D = \frac{L}{RC}$$

$$\phi = 0^\circ$$

$$p.f = Cos\phi = 1$$

$$Q = \frac{X_L}{R} = \frac{X_C}{R} = \frac{1}{R}\sqrt{\frac{L}{C}}$$

ENGINEERING

Copyright reserved

$$BW = \frac{f_o}{Q} = \frac{R}{2\pi\ L}$$

$$BW = \frac{f_o}{Q} = \frac{R}{2\pi\ L}$$

FILTERS

Low pass

$$R_o = \sqrt{\frac{L}{C}}$$

$$f_c = \frac{1}{\pi\sqrt{LC}}$$

$$C = \frac{1}{\pi\ R_o\ f_c}$$

$$L = \frac{R_o}{\pi\ f_c}$$

$$Z_{OT} = \sqrt{\frac{L}{C}} \times \sqrt{1 - \frac{\omega^2 LC}{4}}$$

$$Z_{o\pi} = \frac{R_o}{\sqrt{1 - \frac{\omega^2 LC}{4}}}$$

High pass

$$R_o = \sqrt{\frac{L}{C}}$$

$$f_c = \frac{1}{4\pi\sqrt{LC}}$$

$$C = \frac{1}{4\pi\ R_o\ f_c}$$

$$L = \frac{R_o}{4\pi\ f_c}$$

$$Z_{OT} = \sqrt{\frac{L}{C}} \times \sqrt{1 - \frac{1}{4\omega^2 LC}}$$

$$Z_{o\pi} = \frac{R_o}{\sqrt{1 - \frac{1}{4\omega^2 LC}}}$$

SYMMETRICAL FOUR-TERMINAL NETWORKS

T- Network

$$Z_{in} = Z_{out\ /\ uit}$$

$$Z_{OT} = \sqrt{Z_{oc} Z_{sc}}$$

$$Z_{OT} = \sqrt{\frac{Z_1^{\ 2}}{4} + Z_1 Z_2} = \frac{Z_1 Z_2}{Z_{o\pi}}$$

$$Z_1 = 2\left[Z_{oc} - \sqrt{Z_{oc}(Z_{oc} - Z_{sc})}\right]$$

$$Z_2 = \sqrt{Z_{oc}(Z_{oc} - Z_{sc})}$$

π -Network

$$Z_{in} = Z_{out\ /\ uit}$$

$$Z_{o\pi} = \sqrt{Z_{oc} Z_{sc}}$$

$$Z_{o\pi} = \frac{Z_1 Z_2}{\sqrt{\frac{Z_1^{\ 2}}{4} + Z_1 Z_2}} = \frac{Z_1 Z_2}{Z_{OT}}$$

$$Z_1 = \frac{Z_{sc}\left[Z_{oc} \pm \sqrt{Z_{oc}\ (Z_{oc} - Z_{sc})}\right]}{Z_{oc} + \sqrt{Z_{oc}(Z_{oc} - Z_{sc})} - Z_{sc}}$$

$$Z_2 = \frac{1}{2}\left[Z_{oc} \pm \sqrt{Z_{oc}(Z_{oc} - Z_{sc})}\right]$$

ENGINEERING

Copyright reserved

ASYMMETRICAL FOUR-TERMINAL NETWORKS

Section Image Impedance

$$Z_{o_1} = \sqrt{Z_1^2 + Z_1 Z_2}$$

$$Z_{o_2} = \frac{Z_1 Z_2}{\sqrt{Z_1^2 + Z_1 Z_2}}$$

L-Section Iterative Impedance

$$Z'O_1 = \sqrt{\frac{Z_1^2}{4} + Z_1 Z_2} + \frac{Z_1}{2}$$

$$Z'O_2 = \sqrt{\frac{Z_1^2}{4} + Z_1 Z_2} - \frac{Z_1}{2}$$

NETWORK CONVERSIONS

T → π conversion

$$ZA = \frac{Z_1 Z_2 + Z_2 Z_3 + Z_1 Z_3}{Z_2}$$

$$ZB = \frac{Z_1 Z_2 + Z_2 Z_3 + Z_1 Z_3}{Z_3}$$

$$ZC = \frac{Z_1 Z_2 + Z_2 Z_3 + Z_1 Z_3}{Z_1}$$

π → T conversion

$$Z_1 = \frac{Z_A Z_B}{Z_A + Z_B + Z_C}$$

$$Z_2 = \frac{Z_B Z_C}{Z_A + Z_B + Z_C}$$

$$Z_3 = \frac{Z_A \cdot Z_C}{Z_A + Z_B + Z_C}$$

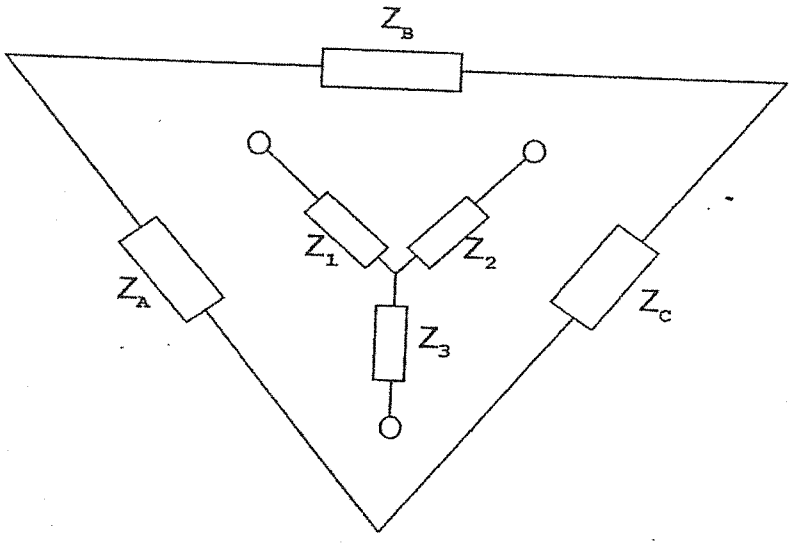

ENGINEERING

Copyright reserved

ATTENUATORS IN GENERAL

$dB = 8{,}686 \times \text{Neper}$

$$dB = 10 \log \left(\frac{P_{in}}{P_{uit/out}} \right)$$

$dB = 20 \log N$

$$Insertion\ Loss = 10 \log \frac{P_1}{P_2} = 20 \log \frac{I_1}{I_2}$$

SYMMETRICAL ATTENUATORS

$$N = \frac{I_{in}}{I_{out/uit}} = \sqrt{\frac{P_{in}}{P_{out/uit}}}$$

T-Type

$$R_a = \frac{R\,(N-1)}{N+1}$$

$$R_b = \frac{2RN}{N^2-1}$$

π-Type

$$R_a = \frac{R\,(N+1)}{N-1}$$

$$R_b = \frac{R(N^2-1)}{2N}$$

Bridged T

$$R_a = R = Z_o$$

$$R_b = R\,(N-1)$$

$$R_c = \frac{R}{N-1}$$

ASYMMETRICAL ATTENUATORS

$$N = \sqrt{\frac{P_{in}}{P_{out/uit}}}$$

L-Type

$$R_a = \sqrt{R_1(R_1 - R_2)}$$

$$R_b = \sqrt{\frac{R_1 R_2^2}{R_1 - R_2}}$$

ENGINEERING

Copyright reserved

MUTUAL INDUCTANCE

$$M = \sqrt{L_p \times L_s} \times k$$

$$k = \frac{M}{\sqrt{L_p P_s}}$$

$$k_c = \frac{1}{\sqrt{Q_p Q_s}}$$

$$Z_c = \frac{(\omega M)^2}{Z_s}$$

$$f_1 = \frac{f_o}{\sqrt{1+k}}$$

$$f_2 = \frac{f_o}{\sqrt{1-k}}$$

$$Q_p = \frac{X_{LP}}{R_p}$$

$$Q_s = \frac{X_{LS}}{R_s}$$

Dot rule

$$L_T = L_1 + L_2 + 2M$$

$$L_T = L_1 + L_2 - 2M$$

AM

$$m = \frac{V_m}{V_c}$$

$$P_{DSB} = \frac{m^2 Pc}{2}$$

$$P_T = P_c\left(1 + \frac{m^2}{2}\right)$$

$$m_T = \sqrt{m_1^2 + m_2^2}$$

$$v_c = V_C Sin\omega_C t + \frac{mV_C}{2}\cos(\omega_C - \omega_m)t - \frac{mV_C}{2}\cos(\omega_C + \omega m_m)t$$

FM

$$v_c = V_c \sin(\omega_{\cos} t - m\cos\omega_M t)$$

$$BW = f_{\text{mod}} \times (\text{number of sidebands}) \times 2$$

SHANNON-HARTLEY

$$C = \Delta f \log_2\left(1 + \frac{S}{N}\right)$$

$$dB = 10\log\left(\frac{\text{signal power}}{\text{noise power}}\right)$$

ENGINEERING

Copyright reserved

higher education & training

Department:
Higher Education and Training
REPUBLIC OF SOUTH AFRICA

MARKING GUIDELINE

NATIONAL CERTIFICATE

AUGUST EXAMINATION

COMMUNICATION ELECTRONICS N5

5 AUGUST 2014

This marking guideline consists of 7 pages.

Copyright reserved

QUESTION 1

1.1

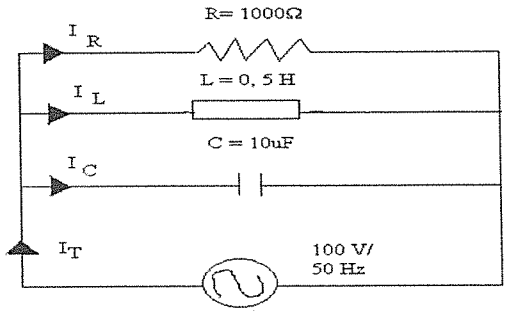

(3)

1.2 1.2.1

$$I_R = \frac{V}{R} \surd$$

$$I_R = \frac{100}{1\,000} \surd$$

$$I = 0{,}1A$$

$$I_L = \frac{V}{X_L} = \frac{V}{2\pi fL}$$

$$I_L = \frac{100}{2\pi \times 50 \times 0{,}5} \surd$$

$$= 0{,}637A$$

$$I_C = \frac{V}{X_C} = \frac{V}{\frac{1}{2\pi fC}} = \frac{V \times 2\pi fC}{10^6} \surd$$

$$= \frac{100 \times 2\pi \times 50 \times 10}{10^6}$$

$$= 0{,}314A$$

$$I_X = I_L - I_C$$

$$= 0{,}637 - 0{,}314$$

$$= 0{,}323A$$

$$I_T = \sqrt{I_R{}^2 + I_X{}^2}$$

$$= \sqrt{0{,}1^2 + 0{,}323} \surd$$

$$= 0{,}3376\ A$$

(5 × 1) (5)

Copyright reserved

1.2.2 $\theta = \tan^{-1}\frac{I_x}{I_R}$ √

$= \tan^{-1}\frac{0,323}{0,1}$ √

$= 72^0 46^{11}$ √ (3)

1.2.3

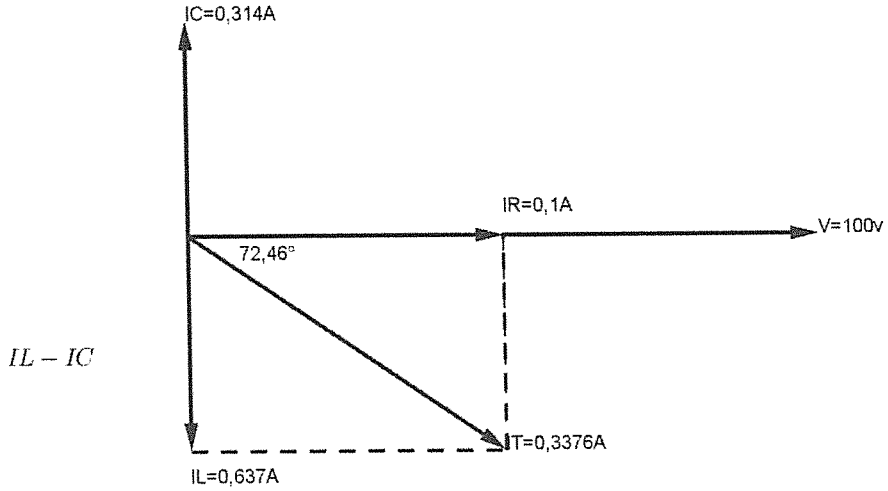

(5)

1.3 $f^2 = \frac{1}{(2\pi)^2 LC}$ √√

$f = \frac{1}{2\pi\sqrt{LC}}$ √√ (4)

[20]

QUESTION 2

2.1 Demodulator is used for separating the signal and carrier components of a modulated carrier wave.

2.2 Modulator is used for varying some characteristic of a periodic wave with time in accordance with a signal by combining the signal and carrier wave.

2.3 Buffer amplifier is used for stabilising the oscillator output to remain constant by isolating it from the load.

2.4 Attenuator is used as a resistive network for reducing voltage, current and power in controllable and known amounts that are independent of frequency.

2.5 Filter is used for separating energy at different frequencies flowing in a circuit and also to suppress the unwanted frequencies.

2.6 Transmitting antenna is used for coupling to space the output of a transmitter by radiating electromagnetic waves.

Copyright reserved

2.7 Receiving antenna is used for coupling to space the input of a receiver by receiving electromagnetic waves.

2.8 Amplifier is used for amplifying the signal to a useable proportion and magnitude.

2.9 AGC is used for maintaining the gain of the receiver when the input signal from the IF amplifier fluctuates.

2.10 L-type attenuator is used for protecting the signal source when several and different loads are connected to a common power source which needs its power delivered to each to be varied without affecting the impedance offered to the signal source.

(10 × 1) **[10]**

QUESTION 3

3.1
- It must be able to provide the correct input impedance. √
- It must be able to provide the correct output impedance. √
- It must be able to provide the correct attenuation. √

(3)

3.2

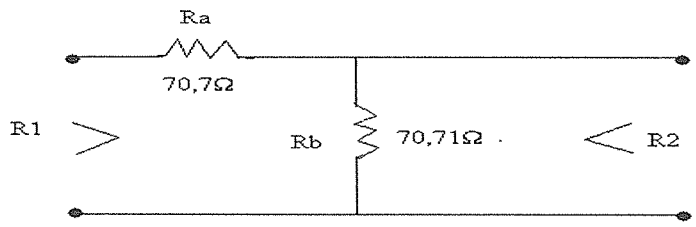

(1)

$$R_a = \sqrt{R_1(R_1 - R_2)} \quad \surd$$
$$= \sqrt{100(100-50)} \surd$$
$$= \sqrt{100 \times 50}$$
$$= 70{,}7\ \Omega \quad \surd$$

(3)

$$R_b = \sqrt{\frac{n_1 n_2^{\,2}}{R_1 - R_2}} \quad \surd$$
$$= \sqrt{\frac{100 \times 50^2}{100-50}} \quad \surd$$
$$= 70{,}71\ \Omega \quad \surd$$

(3)
[10]

Copyright reserved

QUESTION 4

$$Q = \frac{\omega L}{R} \quad \surd$$
$$QR = \omega L \surd$$ (2)

$$i.e\ QR = 2\pi fL \quad but \quad f = \frac{1}{2\pi\sqrt{LC}} \surd\surd\surd$$ (3)

$$\therefore QR = 2\pi L \times \frac{1}{2\pi\sqrt{LC}} \surd$$
$$QR = \frac{L}{\sqrt{LC}} \surd$$ (2)

$$QR = \frac{\sqrt{L}\times\sqrt{L}}{\sqrt{L}\times\sqrt{C}} \surd\surd$$
$$QR = \frac{\sqrt{L}}{\sqrt{C}} \surd$$ (3)

$$\frac{QR}{R} = \sqrt{\frac{L}{C}} \times \frac{1}{R} \quad \surd$$
$$Q = \frac{1}{R}\sqrt{\frac{L}{C}} \quad \surd$$ (2)

[12]

QUESTION 5

$$L = \frac{R_0}{4\pi fC} \surd$$
$$L = \frac{600}{4\pi\times 15\times 10^3} \surd$$
$$L = 0{,}0031826H \surd\surd$$
$$L = 3{,}183\ mH \surd$$ (5)

$$C = \frac{1}{4\pi R_0 fC} \surd$$
$$C = \frac{1}{4\pi\times 600\times 15\times 10^3} \surd$$
$$C = 0{,}00000000884 \surd\surd$$
$$C = 8{,}84\ nF \surd$$ (5)

Copyright reserved

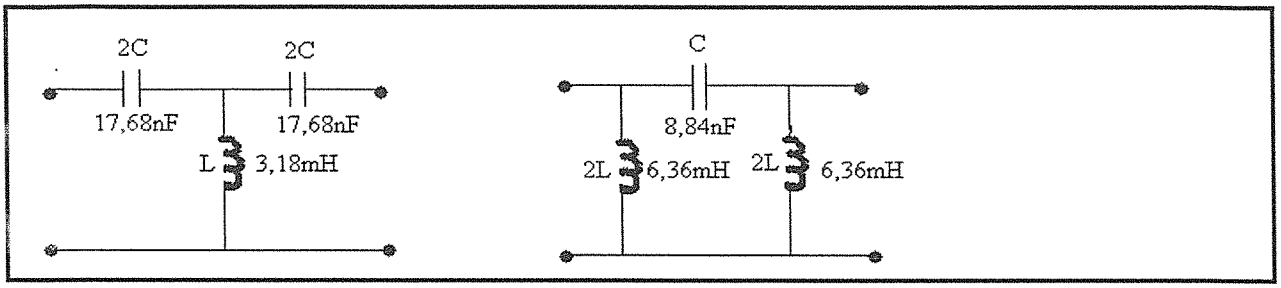

(6)
[16]

QUESTION 6

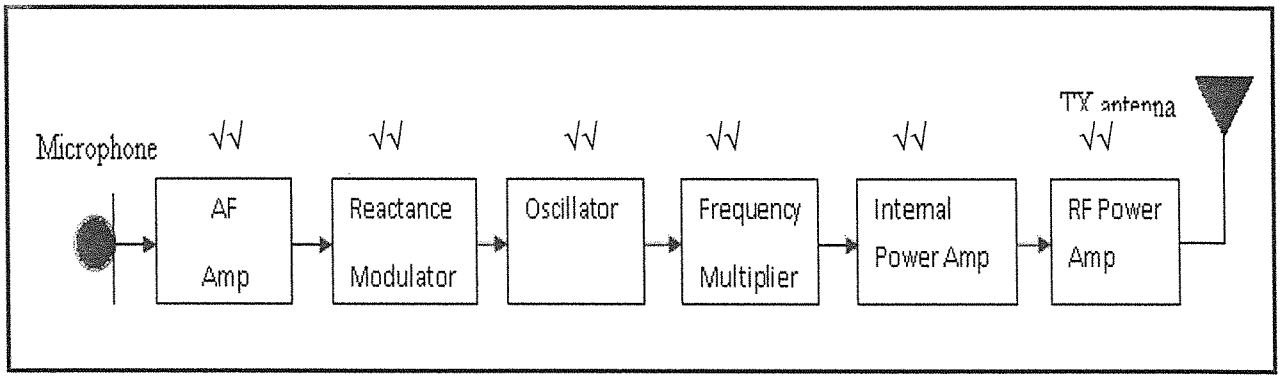

[12]

QUESTION 7

7.1 (Total Power = Carrier Power +Sideband Power)

$P_T = P_C + Sideband\ \ Power$

$$P_T = P_C + \frac{m^2 \times P_C}{2}$$

$$= P_C\left(1 + \frac{m^2}{2}\right)$$

$Since\ \ P_T = 24\ kw$

$and\ \ m = 1(100\%$ modulation)

$$then\ \ 24Kw = P_C\left(1 + \frac{1}{2}\right)$$

$$24\ Kw = \frac{3}{2}P_C$$

$$P_C = \frac{24}{3} \times 2$$

$$P_C = 16\ Kw$$

$m = 0{,}6\ \ for\ 60\%$: modulation

Sideband power $= \frac{m^2 P_C}{2}$ √√

$Power\ in\ one\ sideband = \frac{1}{2}\left(\frac{m^2 P_C}{4}\right)$ √√

$= \frac{0{,}6^2 \times 16\,000}{4}$ √

Sideband power $= 1\ 440\ W$ √ (6)

7.2 When the carrier component is reduced by $26\,dB$

$i.e\ 26\,dB = 10\log 10\frac{16}{P(reduced)}$ √√

$hence\ P(reduced) = 40\ W$ √

Total Power = Power in sideband + New reduced power√
Total Power = 1 440 + 40√
$P_T = 1\,480\ W$ √ (6)
[12]

QUESTION 8

8.1 Antenna losses are defined as the ratio of the actual radiation resistance to the total resistance that dissipated power

8.2 Radiation resistance is defined as the ration of power radiated by the antenna to the square of the current at the free point.

8.3 Antenna efficiency is defined as the ratio of the actual radiation resistance to the total resistance that dissipated power.

8.4 Directive gain as the ration of power density radiated in a particular direction compared to the power density that would be radiated by an isotropic antenna.

(4 × 2) **[8]**

TOTAL: 100

Copyright reserved