higher education & training

Department:
Higher Education and Training
REPUBLIC OF SOUTH AFRICA

T290(E)(N17)T

NOVEMBER EXAMINATION

NATIONAL CERTIFICATE

COMMUNICATION ELECTRONICS N4

(8080224)

17 November 2014 (Y-Paper)
13:00–16:00

Calculators may be used.

This question paper consists of 5 pages, 1 diagram sheet and 1 formula sheet.

ENGINEERING

Copyright reserved

DEPARTMENT OF HIGHER EDUCATION AND TRAINING
REPUBLIC OF SOUTH AFRICA

NATIONAL CERTIFICATE
COMMUNICATION ELECTRONICS N4
TIME: 3 HOURS
MARKS: 100

INSTRUCTIONS AND INFORMATION

1. Answer ALL the questions.
2. Read ALL the questions carefully.
3. Number the answers according to the numbering system used in this question paper.
4. Write neatly and legibly.

ENGINEERING

Copyright reserved

QUESTION 1

Indicate whether the following statements are TRUE or FALSE. Write only 'true' or 'false' next to the question number (1.1–1.10) in the ANSWER BOOK.

1.1 The change in the temperature of the sun causes variation in ultraviolet radiation.

1.2 A buffer in radio communication is used to amplify signals.

1.3 The total current in a parallel circuit at resonance is a maximum.

1.4 The function of an FM modulator is to convert IF to audio.

1.5 An AM signal with 105% modulation is under-modulated.

1.6 A TV antenna is omni-directional.

1.7 The cut-off frequency of a high-pass filter is a point where the attenuation changes from low to high.

1.8 Vertical polarisation in the antenna is the primary source of AM noise.

1.9 The construction of a rhombic antenna is cheap.

1.10 In any closed circuit, the algebraic sum of the products of current and resistance of each part of the circuit is equal to the resultant EMF in the circuit.

(10 × 1) **[10]**

QUESTION 2

2.1 Define the following:

2.1.1 Thevenin's theorem

2.1.2 Norton's theorem

(2 × 2) (4)

2.2 Use Norton's theorem to find the equivalent circuit for the network in the FIGURE on the DIAGRAM SHEET (attached). Draw the equivalent circuit. (6)

[10]

ENGINEERING

Copyright reserved

QUESTION 3

A circuit consists of a coil with a DC resistance of 5 Ω and an inductance of 220 µH in series with a 300 nF capacitor.

Calculate the following:

3.1 The frequency at resonance

3.2 The bandwidth

3.3 The Q-factor

3.4 The total current if the supply voltage is 15 mV

3.5 The upper frequency f_2

(5 × 2) **[10]**

QUESTION 4

4.1 Define an *attenuator.* (2)

4.2 Draw a bridged T-type attenuator. (2)

4.3 Draw a circuit diagram of a band-stop filter. (3)

4.4 Draw the basic graph attenuation versus frequency for the circuit in QUESTION 4.3. (3)
[10]

QUESTION 5

5.1 Make a neat, fully labelled sketch of a two-cavity klystron amplifier. (5)

5.2 Draw the velocity distance diagram for the amplifier in QUESTION 5.1. (5)
[10]

QUESTION 6

6.1 Draw a block diagram of an AM receiver. (5)

6.2 Define the following:

6.2.1 Pulse position modulation

6.2.2 Pulse width modulation

(2 × 2) (4)

ENGINEERING

Copyright reserved

6.3 A 900 kHz carrier wave with amplitude of 12 V is modulated by a 10 kHz audio signal with amplitude of 6 V (AM-transmitter).

6.3.1 Calculate the FOUR frequencies which will show up in a spectrum analysis of the modulated wave. (4)

6.3.2 Sketch the carrier signal. (2)

6.3.3 Sketch the audio signal. (2)

6.3.4 Construct the modulated wave. (2)

6.3.5 What is the percentage modulation? (1)
[20]

QUESTION 7

7.1 Draw a block diagram of an FM superheterodyne transmitter. (5)

7.2 Make a neat, labelled circuit diagram of a Foster-Seely discriminator. (5)

7.3 What is the function of the circuit in QUESTION 7.2? (1)

7.4 Define *frequency modulation*. (2)

7.5 Define *modulation index*. (2)
[15]

QUESTION 8

8.1 Describe the following as applicable to radio wave propagation:

8.1.1 Skip distance

8.1.2 Ionosphere (2 × 2) (4)

8.2 Explain the difference between a *directional* and *omnidirectional* antenna. (2)

8.3 Show, by means of a sketch, the possible ionosphere layers during the day as well as at night. (4)

8.4 Show, by means of a sketch, what is meant by refraction in the ionosphere. (3)

8.5 Make a neat, fully labelled sketch of a helix antenna. (2)
[15]

TOTAL : 100

ENGINEERING

Copyright reserved

DIAGRAM SHEET

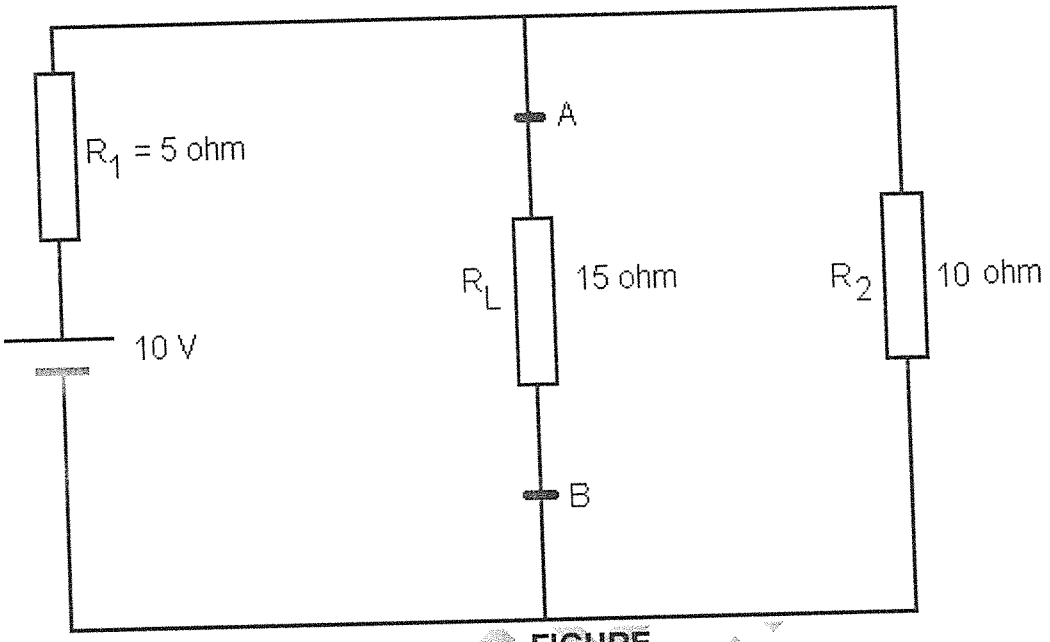

FIGURE

ENGINEER

Copyright reserved

(8080224)

COMMUNICATION-ELECTRONICS N4

FORMULA SHEET

1. $I = \frac{V}{R}$
2. $X_L = 2\pi fL$
3. $X_C = \frac{1}{2\pi fc}$
4. $Z = \sqrt{R^2 + (X_L - X_C)^2}$
5. $I = \frac{V}{Z}$
6. $V_R = I \,.\, R$

   $V_L = I \,.\, X_L$

   $V_C = I \,.\, X_C$
7. $Cos\phi = \frac{R}{Z}$
8. $I = \sqrt{I_R + I_C^2}$
9. $\theta = Tan^{-1}\frac{I_C}{I_R}$
10. $I = \sqrt{I_R^2 + I_L^2}$
11. $I = \sqrt{I_R^2 + (I_L - L_C)^2}$
12. $\theta = Tan^{-1}\frac{(I_L - I_C)}{I_R}$
13. $f_r = \frac{1}{2\pi\sqrt{LC}}$
14. $C = \frac{1}{4\,.\,\pi^2\,.\,f_r^2\,.\,L}$
15. $L = \frac{1}{4\,.\,\pi^2\,.\,f_r^2\,.\,C}$
16. $Q = \frac{X_L}{R} = \frac{1}{R}\sqrt{\frac{L}{C}} = \frac{f_R}{bandwidth/bandwydte}$
17. $V_c = V \times Q$ *and/en* $V_L = V \times Q$
18. $Z = \frac{L}{CR}$
19. $I_c = I \times Q$
20. $I_L = I \times Q$
21. $f = \frac{v}{\lambda}$
22. $B - W = \frac{R}{2\pi L}$
23. $V_T = \sqrt{V_R{}^2 + (V_C - V_L)^2}$

ENGINEERING

Copyright reserved

higher education & training

Department:
Higher Education and Training
REPUBLIC OF SOUTH AFRICA

MARKING GUIDELINE

NATIONAL CERTIFICATE

NOVEMBER EXAMINATION

COMMUNICATION ELECTRONICS N4

17 NOVEMBER 2014

This marking guideline consists of 10 pages.

Copyright reserved

QUESTION 1

1.1 True

1.2 False

1.3 True

1.4 False

1.5 False

1.6 False

1.7 False

1.8 False

1.9 True

1.10 True

(10 × 1) **[10]**

QUESTION 2

2.1 2.1.1 Thevenin's theorem

Any two terminal network of impedances and generators may be replaced by a single equivalent voltage generator and series impedance. (2)

2.1.2 Norton's theorem

Any two-terminal network of generators and impedances may be replaced by a single constant current generator I_N in parallel with a single Norton resistance R_N. (2)

Copyright reserved

2.2

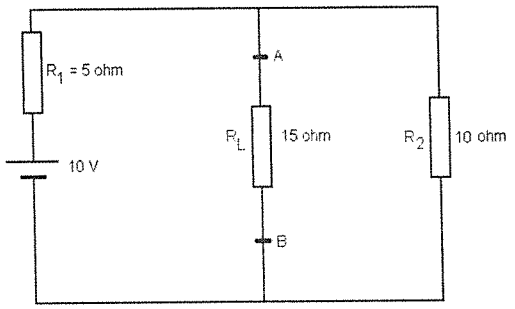

FIGURE 1

Remove load and Short-Circuit Battery

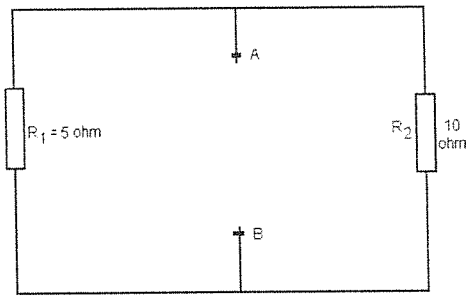

$R_{TH} = R_{AB} = R_1 + R_2$
$= 5 + 10$
$= 15\ \Omega$

(6)

Replace battery and short-circuit AB open

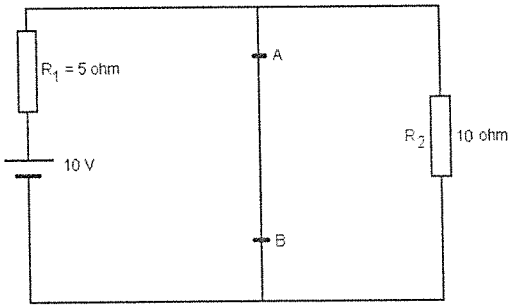

$R_T = R_1 = 5\ \Omega$
$I_T = I_N = 10/5 = 2\ A$

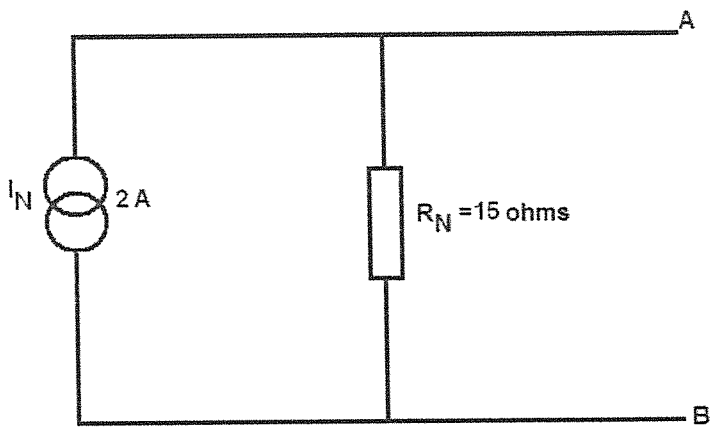

[10]

QUESTION 3

3.1 $F_r = 1/ (2\pi \sqrt{LC})$
$= 1/(2\pi \sqrt{220 \times 10^{-6} \times 300 \times 10^{-9}})$
$= 19.59$ kHz

3.2 B-W $= R/(2\pi L)$
$= 5/(2\pi \times 220 \times 10^{-6})$
$= 3.62$ kHz

3.3 Q-factor $= R^{-1}(\sqrt{L/C})$
$= 5^{-1} (\sqrt{220 \times 10^{-6} /300 \times 10^{-9}})$
$= 122.5$

3.4 $I_T = V/Z$
$= 15 \times 10^{-3}/5$
$= 3$ mA

3.5 $f_2 = F_r + B\text{-}W/2$
$= 19.59 \times 10^3 + 3.62 \times 10^3/2$
$= 21.4$ kHz

(5×2) **[10]**

QUESTION 4

4.1 Attenuator

A resistive network designed to reduce voltage, current or power to controllable amounts and is independent of frequency (2)

4.2 Bridged T-type attenuator

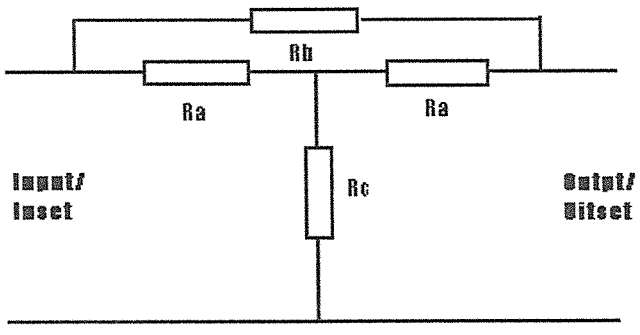

(2)

4.3 Band-stop filter

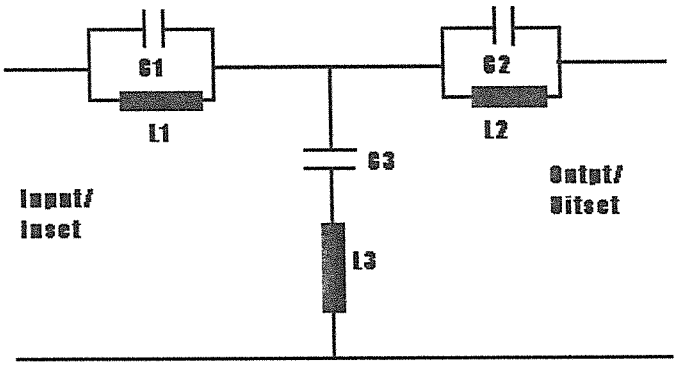

(3)

4.4 Attenuation v/s frequency for a Band-stop filter

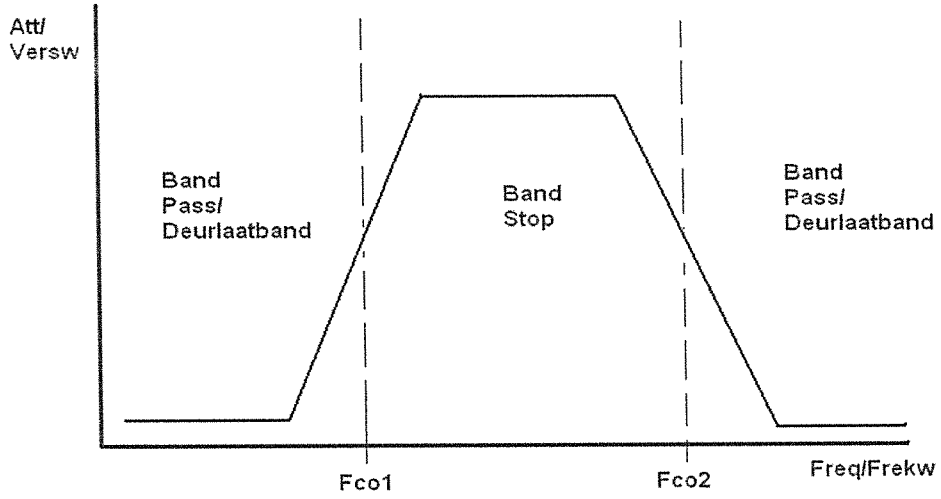

(3)
[10]

QUESTION 5

5.1 Double Cavity Klystron Amplifier

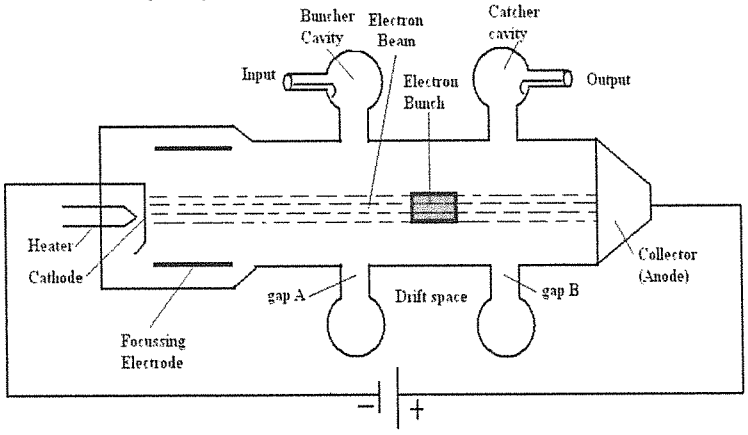

(5)

5.2

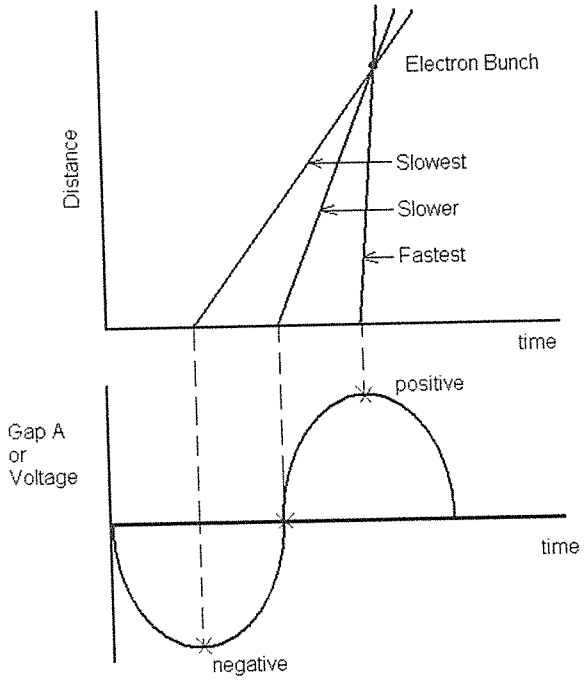

(5)
[10]

QUESTION 6

6.1 AM Superheterodyne receiver

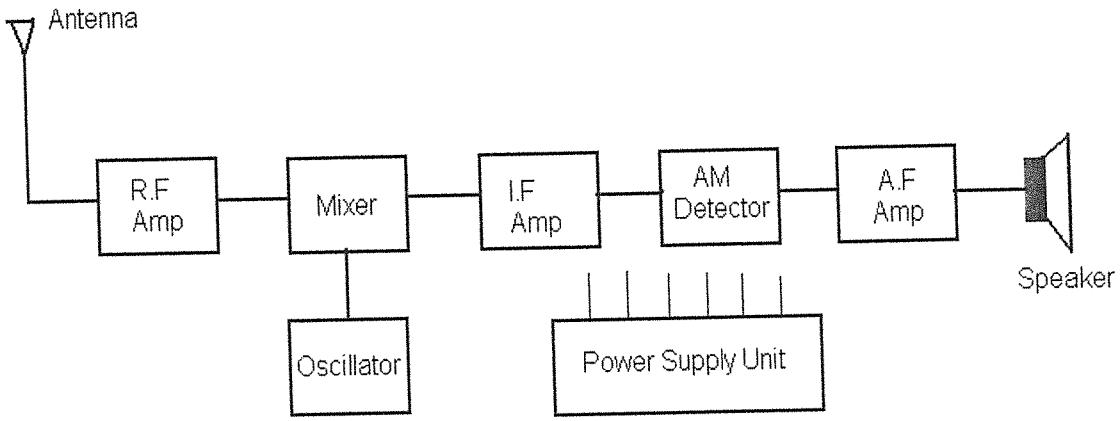

(5)

6.2 6.2.1 Pulse position modulation

A process whereby the position of the pulse carrier wave is made to vary in accordance with the instantaneous value of the modulating signal. (2)

6.2.2 Pulse width modulation

A process whereby the width of the pulse carrier wave is made to vary in accordance with the instantaneous value of the modulating signal. (2)

6.3 6.3.1 F_C = 900 kHz

Copyright reserved

F_m = 10 kHz
$F_C - F_m$ = 900 kHz - 10 kHz = 880 kHz
$F_C + F_m$ = 900 kHz +10 kHz = 910 kHz (4)

6.3.2 Carrier signal

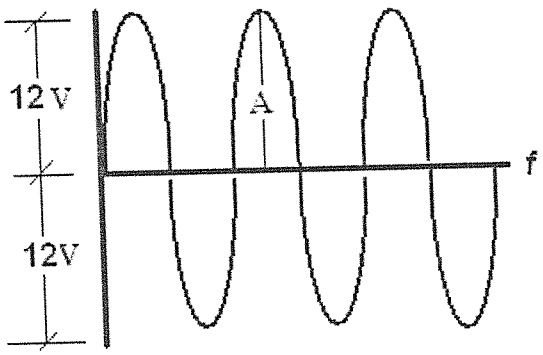

(2)

6.3.3 Audio signal

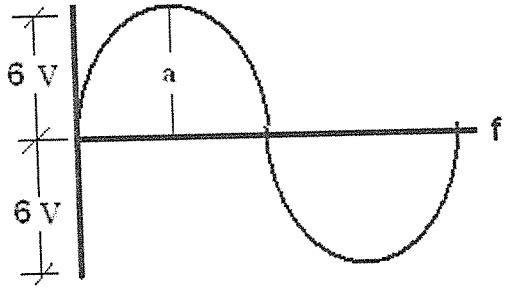

(2)

6.3.4 Modulated wave

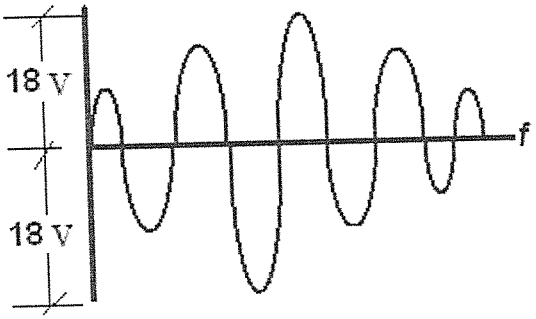

(2)

6.3.5 50% (1)
[20]

QUESTION 7

7.1 FM-transmitter

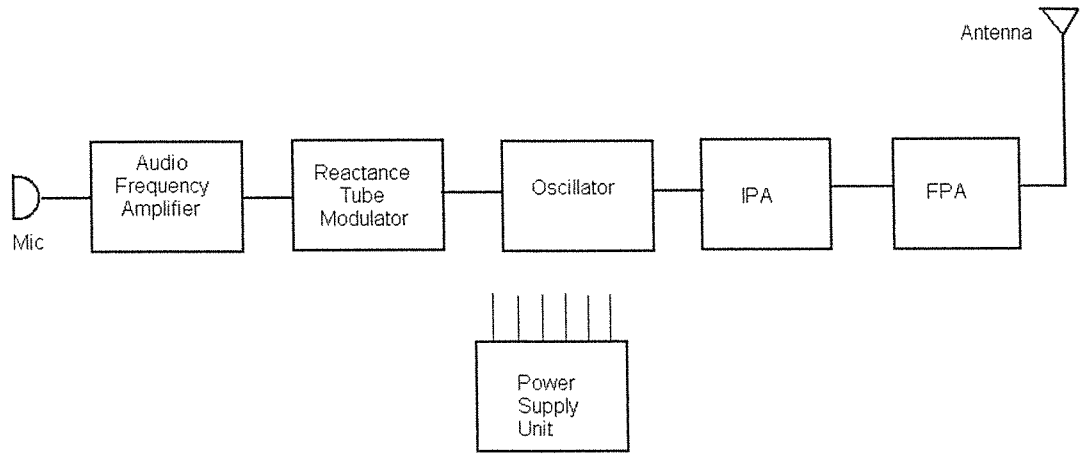

(5)

7.2 Foster-Seeley discriminator

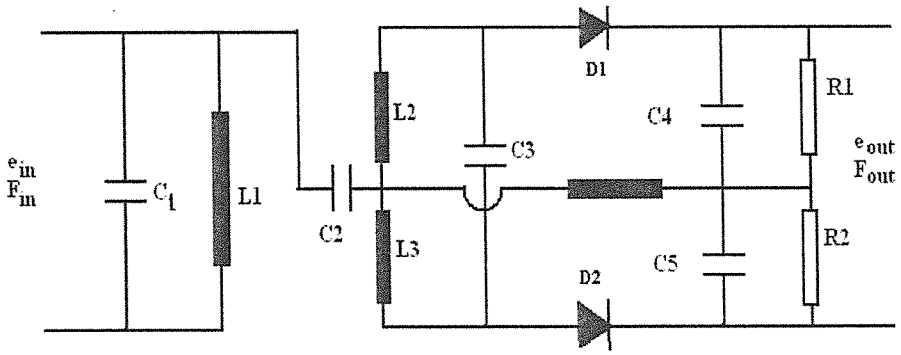

(5)

7.3 Function of the Foster Seely Discriminator

Converts frequency variations to voltage variations.
Converts FM-signal to audio signal. (1)

7.4 Frequency Modulation

A process whereby the frequency of the carrier wave is made to vary in accordance with the instantaneous value of the modulating signal. (2)

7.5 Modulation Index – The degree of modulation in an FM system (2)
[15]

Copyright reserved

QUESTION 8

8.1 8.1.1 Skip distance
Distance from the transmitter to a point where the sky-wave signal is first heard. It is dependent on the critical angle and the ionosphere layer heights. (2)

8.1.2 Ionosphere
The region in the upper atmosphere in which radio waves are bent back to earth's surface.

It is an area where the air pressure is so low that 'free' electrons and ions exist for long periods without getting close enough to recombine into a neutral atom. (2)

8.2 Directional antenna
Concentrates radiation mainly in one direction

Omnidirectional antenna
Concentrate radiation in all direction (2)

8.3 Possible ionosphere layers during the day as well as at night

Day: F region spilts up into F_1 and F_2

Night: F_1 layer disappears causing F_2 layer to drop

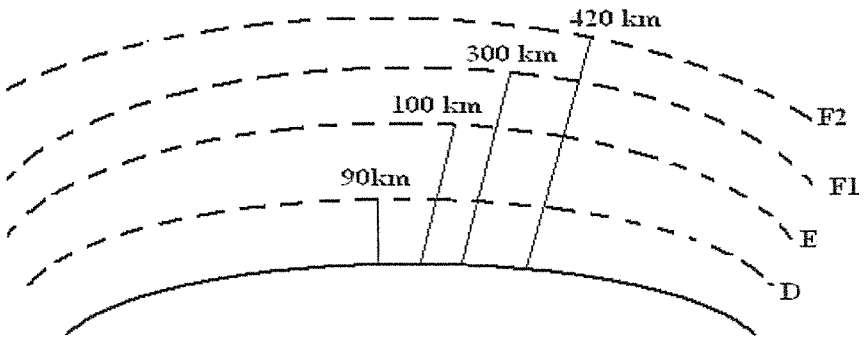

(4)

Copyright reserved

8.4 Refraction in the ionosphere

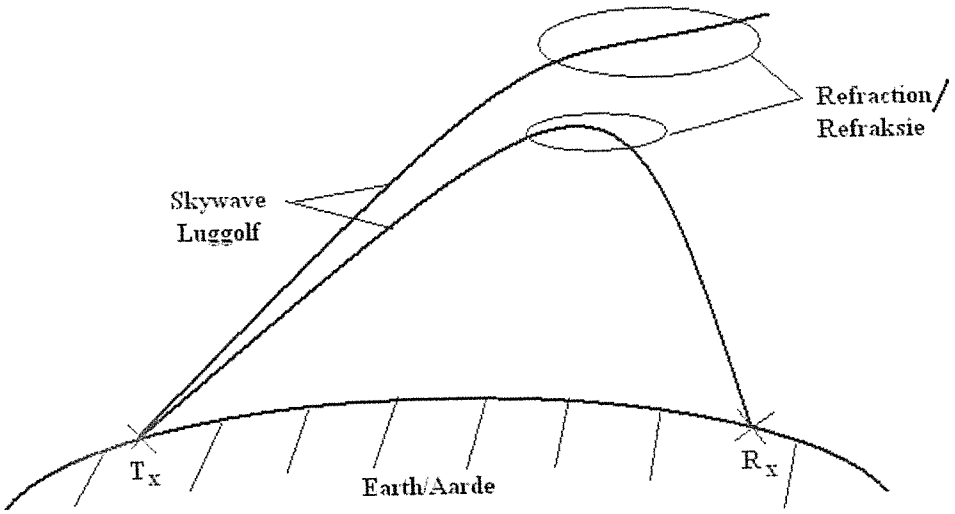

(3)

8.5

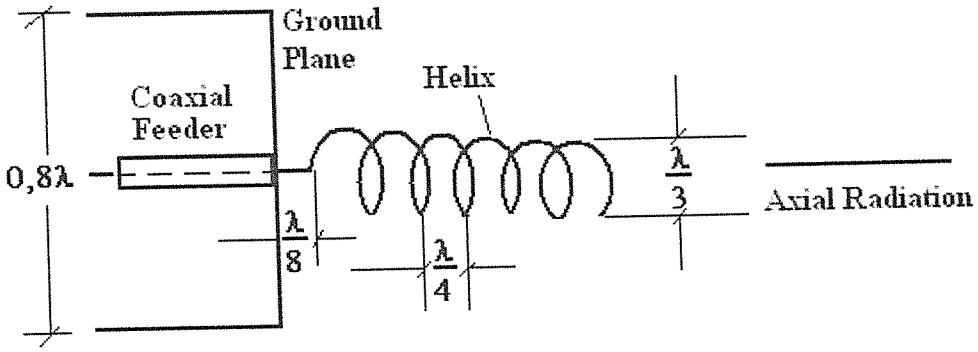

Helix Antenna

(2)
[15]

TOTAL : 100

Copyright reserved