higher education & training

Department:
Higher Education and Training
REPUBLIC OF SOUTH AFRICA

T310(E)(A1)T
APRIL EXAMINATION

NATIONAL CERTIFICATE

COMMUNICATION ELECTRONICS N4

(8080224)

1 April 2015 (Y-Paper)
13:00–16:00

Calculators may be used.

This question paper consists of 5 pages, 1 diagram sheet and 1 formula sheet.

ENGINEERING

Copyright reserved

DEPARTMENT OF HIGHER EDUCATION AND TRAINING
REPUBLIC OF SOUTH AFRICA

NATIONAL CERTIFICATE
COMMUNICATION ELECTRONICS N4
TIME: 3 HOURS
MARKS: 100

INSTRUCTIONS AND INFORMATION

1. Answer ALL the questions.
2. Read ALL the questions carefully.
3. Number the answers according to the numbering system used in this question paper.
4. Write neatly and legibly.

ENGINEERING

Copyright reserved

QUESTION 1

Indicate whether the following statements are TRUE or FALSE. Write only 'true' or 'false' next to the question number (1.1–1.10) in the ANSWER BOOK.

1.1 A modem is a combination of a modulator and demodulator.

1.2 A travelling wave tube is an example of a filter in radio communication.

1.3 An antenna in any receiver converts audio waves to minute currents.

1.4 Ultraviolet radiation from the sun is the primary cause of ionisation.

1.5 The impedance of series circuit at resonance is a minimum.

1.6 A radio antenna is directional.

1.7 The output of a travelling wave tube decreases exponentially.

1.8 A microphone converts audio waves into radio frequencies.

1.9 In a klystron oscillator, the function of the catcher cavity is to collect a stream of electrons.

1.10 The function of an FM-modulator is to convert IF to audio.

(10 × 1) **[10]**

QUESTION 2

2.1 Define the following:

2.1.1 Norton's theorem

2.1.2 Thevenin's theorem

(2 × 2) (4)

2.2 Use Norton's theorem to find the equivalent circuit for the network in the FIGURE on the DIAGRAM SHEET (attached). Draw the equivalent circuit. (6)

[10]

ENGINEERING

Copyright reserved

QUESTION 3

A series circuit consists of the following
R = 5 Ω,
L = 100 mH
C = 150 nF

Calculate the following:

3.1 The frequency at resonance

3.2 The bandwidth

3.3 The Q-factor

3.4 Prove the answer in QUESTION 3.2 using any alternative methods

3.5 Prove the answer in QUESTION 3.3 using any alternative methods

(5 × 2) **[10]**

QUESTION 4

4.1 Identify the diagram in FIGURE 2 on the DIAGRAM SHEET. (1)

4.2 Draw the basic gain versus frequency graph for the diagram in FIGURE 2 on the DIAGRAM SHEET. (3)

4.3 Choose the correct answer from those given in brackets.

4.3.1 At low frequencies XC is (low/high) and input will be (passed/ blocked) to output.

4.3.2 At low frequencies XL is (low/high) and input will be (passed/ blocked) to ground.

4.3.3 At high frequencies XC is (low/high) and input will be (passed/ blocked) to output.

(2 x 3) (6)
[10]

QUESTION 5

Make a neat, fully labelled sketch of the following:

5.1 Two-cavity klystron amplifier.

5.2 The velocity distance diagram for the amplifier in QUESTION 5.1

(5 x 2) **[10]**

ENGINEERING

QUESTION 6

6.1 Draw a block diagram of an AM- superheterodyne receiver. Briefly explain the function of each stage. (15)

6.2 Draw a circuit diagram of an AM Modulator. (5)
[20]

QUESTION 7

7.1 Draw a block diagram of an FM-transmitter. (5)

7.2 A 98,0 MHz carrier wave is frequency modulated by a 5 kHz sine wave. The resultant FM signal has a frequency deviation of 45 kHz. What is the modulation index of the FM wave? (2)

7.3 Make a neat, labelled circuit diagram of a Foster-Seely discriminator. (5)

7.4 What is the function of the circuit in QUESTION 7.3? (1)

7.5 Define *modulation index*. (2)
[15]

QUESTION 8

8.1 Define the following:

8.1.1 Polarisation

8.1.2 Silent zone

8.1.1.3 Beamwidth

(2 × 3) (6)

8.2 Briefly explain what is meant by sunspots and how they have an influence on radio communication

8.3 Make neat, fully labelled sketches of the following:

8.1.1 Rhombic antenna

8.1.2 Helix antenna

8.1.1.3 Standard half wave antenna

(2 × 3) (6)
[15]

TOTAL : 100

ENGINEERING

Copyright reserved

DIAGRAM SHEET

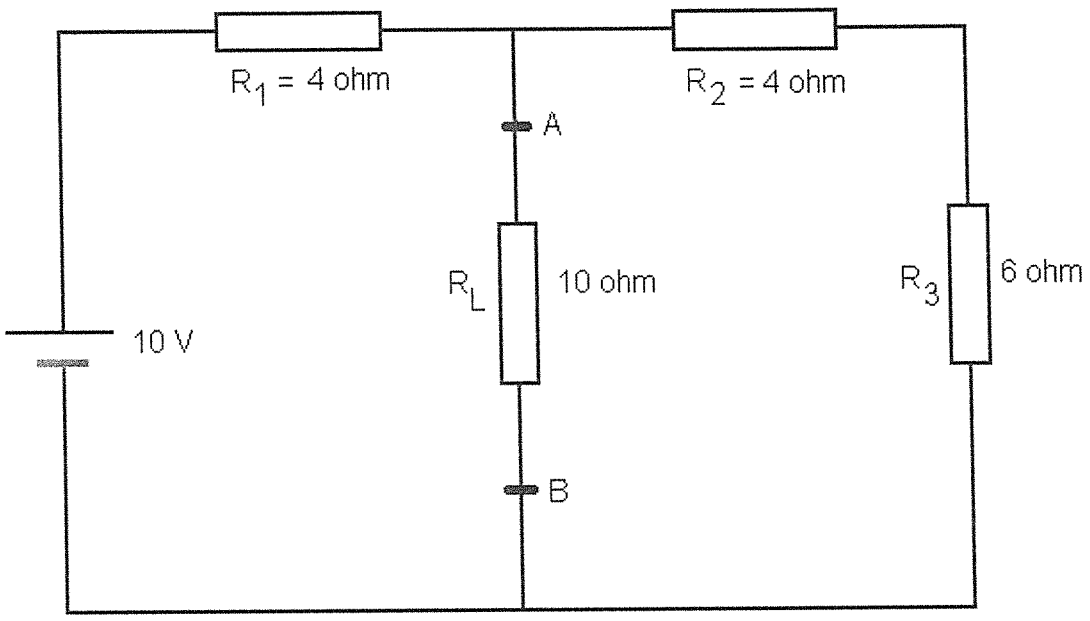

FIGURE 1

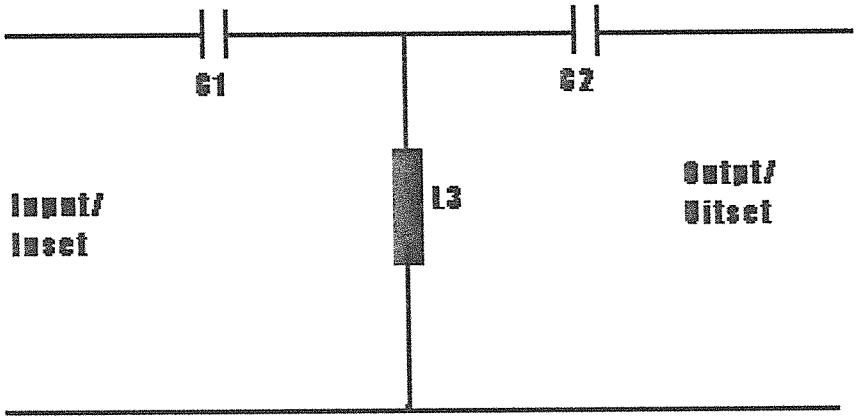

FIGURE 2

Copyright reserved

COMMUNICATION-ELECTRONICS N4

FORMULA SHEET

1. $I = \frac{V}{R}$
2. $X_L = 2\pi fL$
3. $X_C = \frac{1}{2\pi fc}$
4. $Z = \sqrt{R^2 + (X_L - X_C)^2}$
5. $I = \frac{V}{Z}$
6. $V_R = I \,.\, R$

   $V_L = I \,.\, X_L$

   $V_C = I \,.\, X_C$
7. $Cos\phi = \frac{R}{Z}$
8. $I = \sqrt{I_R + I_C^2}$
9. $\theta = Tan^{-1}\frac{I_C}{I_R}$
10. $I = \sqrt{I_R^2 + I_L^2}$
11. $I = \sqrt{I_R^2 + (I_L - L_C)^2}$
12. $\theta = Tan^{-1}\frac{(I_L - I_C)}{I_R}$
13. $f_r = \frac{1}{2\pi\sqrt{LC}}$
14. $C = \frac{1}{4\,.\,\pi^2\,.\,f_r^2\,.\,L}$
15. $L = \frac{1}{4\,.\,\pi^2\,.\,f_r^2\,.\,C}$
16. $Q = \frac{X_L}{R} = \frac{1}{R}\sqrt{\frac{L}{C}} = \frac{f_R}{bandwidth/bandwydte}$
17. $V_c = V \times Q \; and/en \; V_L = V \times Q$
18. $Z = \frac{L}{CR}$
19. $I_c = I \times Q$
20. $I_L = I \times Q$
21. $f = \frac{v}{\lambda}$
22. $B - W = \frac{R}{2\pi L}$
23. $V_T = \sqrt{V_R{}^2 + (V_C - V_L)^2}$

ENGINEERING

Copyright reserved

higher education & training

Department:
Higher Education and Training
REPUBLIC OF SOUTH AFRICA

MARKING GUIDELINE

NATIONAL CERTIFICATE

APRIL EXAMINATION

COMMUNICATION ELECTRONICS N4

1 APRIL 2015

This marking guideline consists of 9 pages.

Copyright reserved

QUESTION 1

1.1 True

1.2 False

1.3 False

1.4 True

1.5 True

1.6 True

1.7 False

1.8 True

1.9 True

1.10 True

(10 x 1) **[10]**

QUESTION 2

2.1 2.1.1 **Norton's theorem**
Any two terminal network of generators and impedances may be replaced by a single constant current generator I_N in parallel with a single Norton's resistance R_N.

2.1.2 **Thevenin's theorem**
Any two terminal network of impedances and generators may be replaced by a single equivalent voltage generator and series impedance

(2 x 2) (4)

Copyright reserved

2.2 Remove load and short-circuit battery

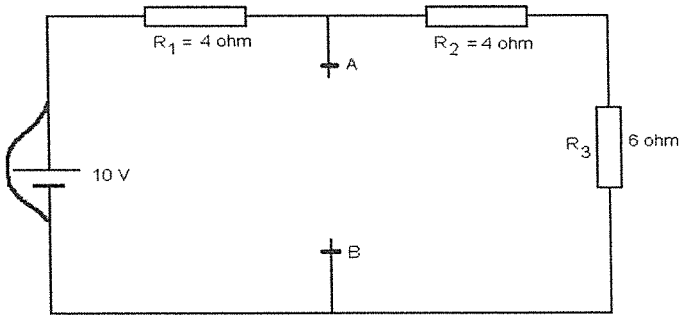

$R_{AB} = R_N = \frac{[4 \times (4+6)]}{4 + (4 + 6)}$

$= 2.86$ ohm

Replace battery and short-circuit AB

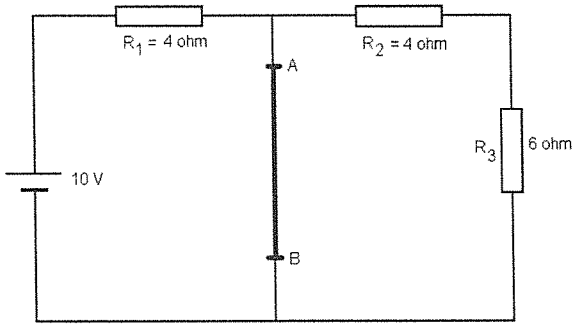

(6)

$R_T = R_1$

$= 4$ ohm

$I_N = \frac{V}{R_T}$

$= 10/4$

$= 2.5$ Amp

Norton's Equivalent Circuit

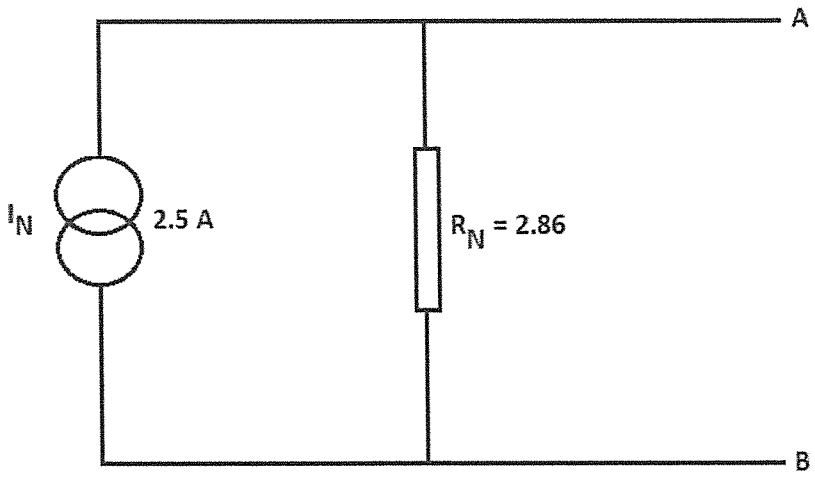

[10]

QUESTION 3

3.1 $F_r = 1/ (2\pi \sqrt{LC})$
$= 1/(2\pi \sqrt{100 \times 10^{-3} \times 150 \times 10^{-9}})$
$= 1.3$ kHz

3.2 B-W = $R/(2\pi L)$
$= 5/(2\pi \times 100 \times 10^{-3})$
$=7.96$ Hz

3.3 Q-factor = $R^{-1}(\sqrt{L/C})$
$= 5^{-1} (\sqrt{100 \times 10^{-3} / 150 \times 10^{-9}})$
$= 163.3$

3.4 B-W = F_r/Q
$= 1.3 \times 10^3/163.3$
$= 7.96$ Hz

3.5 Q-factor = $2\pi F_r L/R$
$= \frac{2\pi \times 1.3 \times 10^3 \times 100 \times 10^{-3}}{5}$
$= 163.3$

(2 x 5) **[10]**

QUESTION 4

4.1 High-pass filter (1)

4.2 **Gain v/s Frequency for high-pass filter**

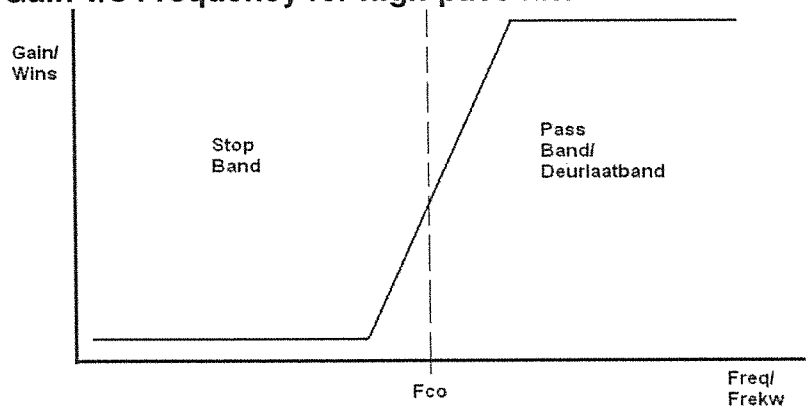

(3)

4.3.1 At low frequencies X_C is **high** and input will be **blocked** to output

4.3.2 At low frequencies X_L is **low** and input will be **passed** to ground

4.3.3 At high frequencies X_C is **low** and input will be **passed** to output

(2 x 3) (6)
[10]

Copyright reserved

QUESTION 5

5.1. Two-cavity klystron Amplifier

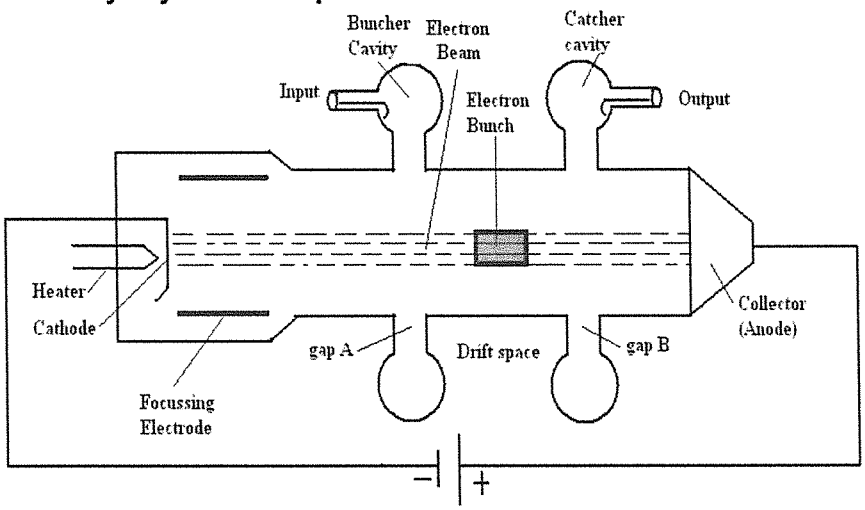

(5)

5.2 Velocity distance diagram

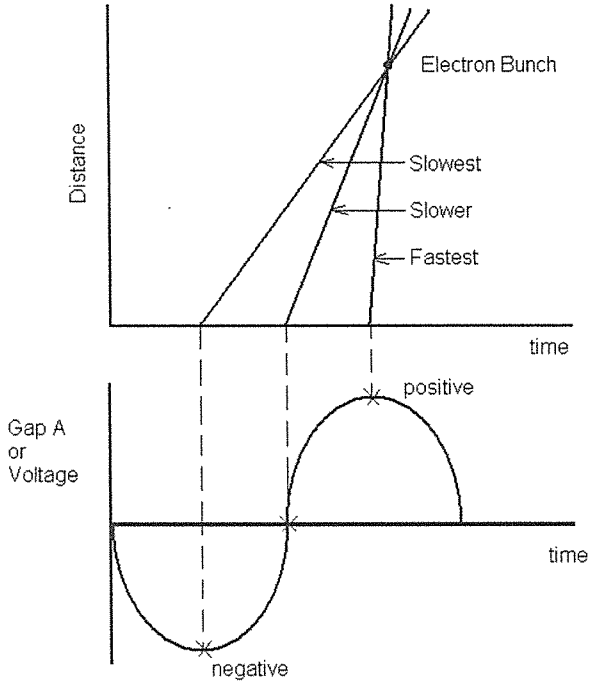

(5)
[10]

QUESTION 6

AM-Superheterodyne Receiver

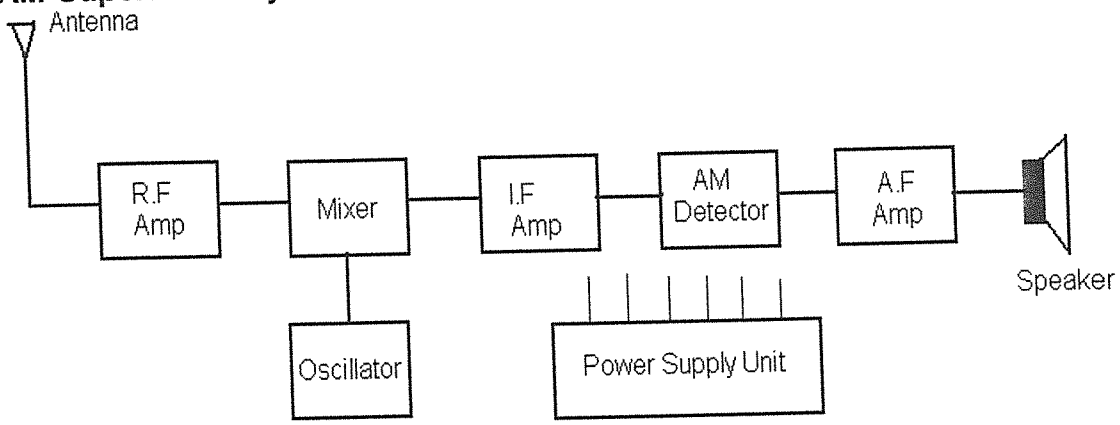

THE FUNCTION OF EACH STAGE

Antenna
Electromagnetic waves are converted into electric current. (1)

RF Amplifier
Amplifies the signal to which it is tuned (1)

Oscillator
Supplies RF signal (carrier) of constant amplitude and frequency (1)

Mixer
Input: RF + carrier (oscillator frequency)
Output: IF, 3 other frequencies + noise (2)

IF Amp
Amplifies the Intermediate frequency (1)

Detector
Converts IF to audio. (1)

AF Amplifier
Amplifies the audio signal (1)

Loudspeaker
Converts audio to sound (1)

Power Supply Unit
Supplies regulated DC voltage to all stages (1)
[10]

Copyright reserved

6.2 **AM-Modulator**

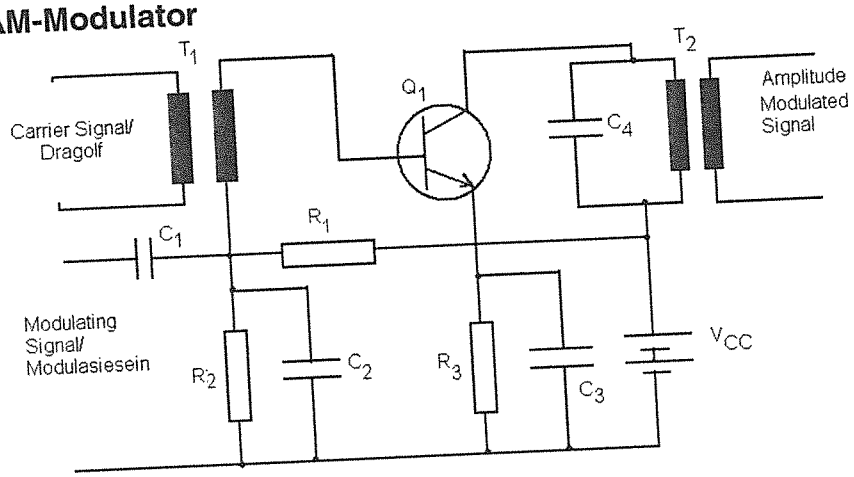

(5)
[20]

QUESTION 7

7.1 **FM-Transmitter**

QUESTION 7.1

FM TRANSMITTER

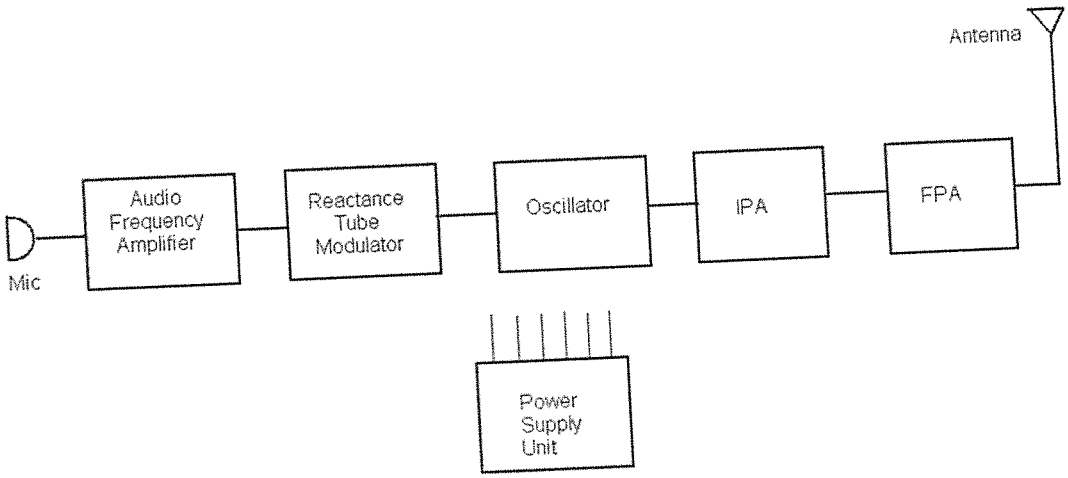

(5)

7.2 $m = \frac{\Delta f}{f_m}$

$= \frac{45 \times 10^3}{5 \times 10^3}$

$= 9$

(2)

Copyright reserved

7.3 **Ratio detector**

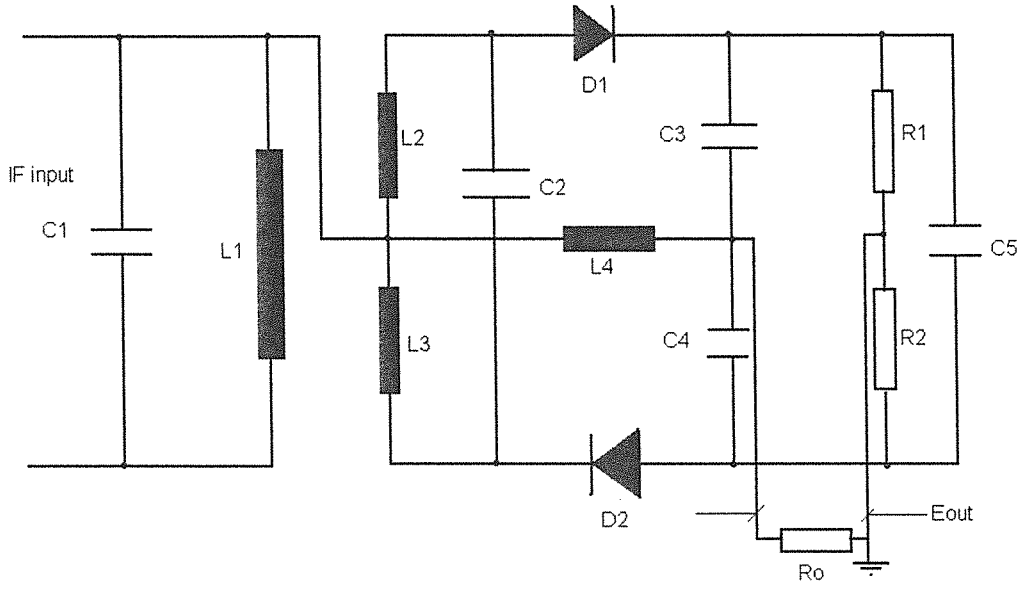

(5)

7.4 **Function of a FM ratio detector:** To convert FM-signals to audio (1)

7.5 **Modulation Index-**The degree of modulation in an FM system (2)
[15]

QUESTION 8

8.1 8.1.1 **Polarization**
It refers to the direction space of the electric field which is radiated from the antenna and is parallel to the antenna itself. (2)

8.1.2 **Silent zone**
The 'silent' region extending from the limit of the useful ground wave to the distant point where the signal is first heard (2)

8.1.3 **Beamwidth**
The angular separation between the two points on the major lobe of radiation at which the power received at a distant point is one half of that received an the axis of the lobe at the same distance. (2)

8.2 **Sunspots and their influence on radio communication**
- ✓ Temperature of the sun varies causing variation in ultraviolet radiation.
- ✓ Ultraviolet radiation from the sun is the main cause of ionisation.
- ✓ Variation in ionisation of ionosphere layers has an effect on radio communication. (3)

8.3 8.3.1 **Rhombic antenna**

(2)

8.3.2

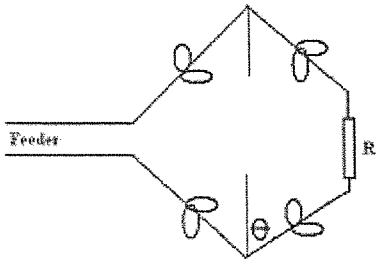

Helix antenna

(2)

8.3.3

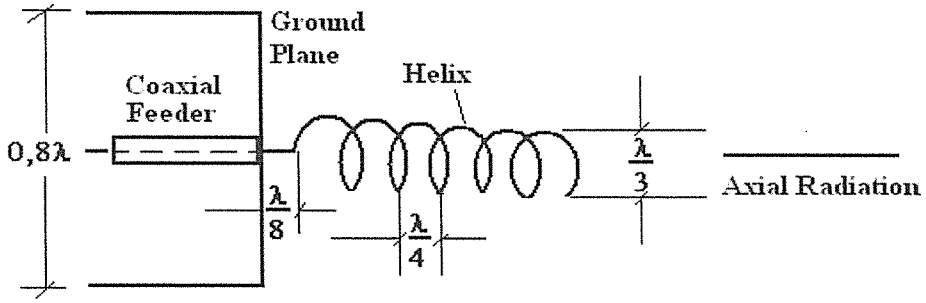

Standard half-wave dipole antenna

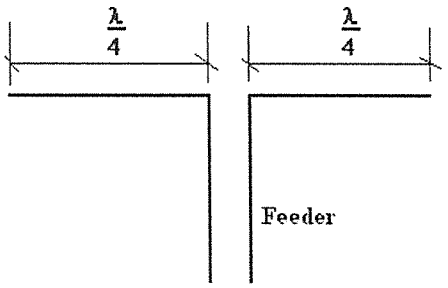

(2)
[15]

TOTAL : 100

Copyright reserved