higher education & training

Department:
Higher Education and Training
REPUBLIC OF SOUTH AFRICA

MARKING GUIDELINE

NATIONAL CERTIFICATE

COMMUNICATION ELECTRONICS N4

26 July 2021

This marking guideline consists of 9 pages.

Copyright reserved

INSTRUCTIONS TO MARKERS

1. Mark all the questions.
2. Follow the answers according to the numbering system used in this question paper.
3. Use only a red pen.
4. Make your ticks and crosses neatly and legibly.

Copyright reserved

QUESTION 1

1.1 True
1.2 True
1.3 False
1.4 False
1.5 False
1.6 True
1.7 True
1.8 True
1.9 True
1.10 False

(10 × 1) **[10]**

QUESTION 2: NETWORK THEOREMS

2.1 2.1.1 The algebraic sum of the emfs in any closed circuit is equal to the algebraic sum of the potential differences in that circuit. (3)

2.1.2 Any two terminal networks of impedances and generators may be replaced by a single equivalent voltage generator and series impedance. (3)

2.2 Remove load and short-circuit battery

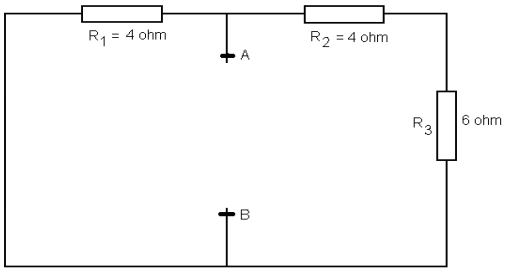

$$R_{TH} = R_{AB} = \frac{R_1 \times Rs}{R_1 + R_S}$$
$$= \frac{4 \times 10}{4 + 10}\checkmark$$
$$= 2{,}86\ \Omega\checkmark$$

Replace battery and leave AB open

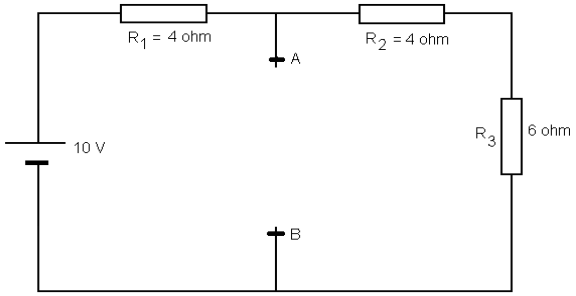

$R_T = R_1 + R_2 + R_3 = 4 + 4 + 6 = 14\ \Omega$✓
$I_T = V/R_T = 10/14 = 0,71\ A$✓
$V_{AB} = V_{TH} = I_T \times Rs = 0,71 \times 10 = 7,1\ V$✓

Thevenin's equivalent circuit✓✓

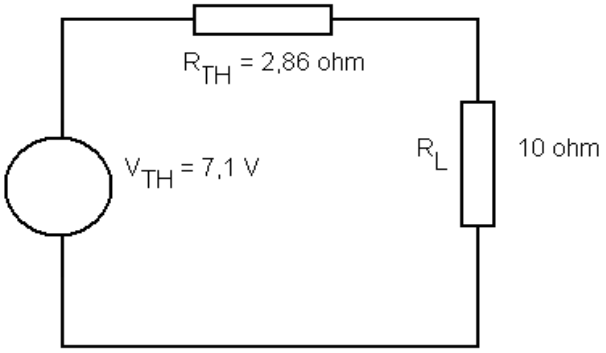

(8)
[14]

QUESTION 3: ALTERNATING CURRENT THEORY

3.1 $X_L = X_C$

$2\pi f L = 1/(2\pi fc)$

$2\pi f L \times 2\pi fc = 1$

$4\pi^2 \times f^2 \times LC = 1$

$f^2 = 1/(4\pi^2 LC)$

$f_r = 1/(2\pi \sqrt{LC})$✓✓ (2)

3.2 3.2.1 The capacitance required for resonance:

$f_r = 1/(2\pi \sqrt{LC})$

$C = 1/(f_r 2\pi)^2 L$

$= 1/(50 \times 2 \times \pi)^2 \times 0,5$

$C = 20,26\ \mu F$✓✓ (2)

3.2.2 The current at resonance:

Current I, at resonance = V/R

$= 100/R$

$I = 25\ A$✓ (1)

3.2.3 The voltage across the inductor at resonance:
Inductor voltage V_L at resonance $= I \times X_L$
But $X_L = 2\pi fL$
$= 2 \times \pi \times 50 \times 0,5$
$= 157,08\ \Omega$
$\therefore V_L = I \times X_L$
$= 25 \times 157,08$
$= 3\ 927\ V$✓✓ (2)

3.2.4 The voltage across the capacitor at resonance:
Capacitor voltage Vc at resonance $= I \times Xc$
But $Xc = 1/(2\pi fc)$
$= 1/(2 \times \pi \times 50 \times 20,26 \times 10^{-6})$
$= 157,09\ \Omega$
$\therefore Vc = I \times X_c$
$= 25 \times 157,09$
$= 3\ 927,3\ V$✓✓ (2)

3.2.5 The Q factor of the circuit:
Q-factor $= 1/R \times (\sqrt{L/C})$
$= 1/4 \times (\sqrt{0,5/20,26 \times 10^{-6}})$
$= 39,27$✓✓
(2)
[11]

QUESTION 4: ATTENUATORS AND FILTERS

4.1 4.1.1 It is the attenuator pad when only fixed resistors are used in the network.

4.1.2 It is the attenuator pad when some or all of the resistors used in the network are variable, making it possible to control the amount of attenuation by varying one or more of the variable resistors.
(2 × 1) (2)

4.2 4.2.1

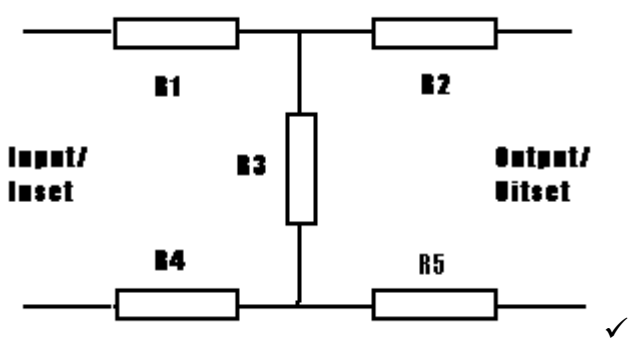

✓

4.2.2 **Bridged T-type attenuator**✓

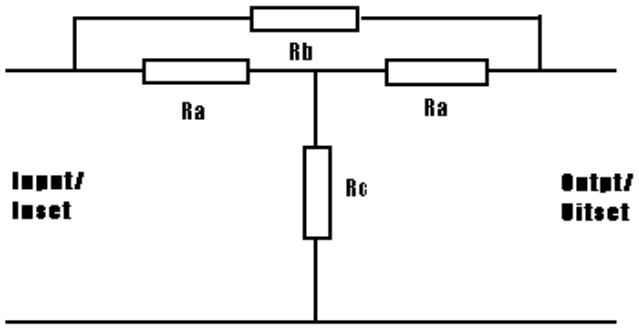

(2 × 1) (2)

4.3 The composite filter consists of a prototype and derived filter sections connected in tandem and designed to give the required input impedance and sharpness of cut-off frequency. The derived section is designed to give the required sharpness of cut-off frequency. The prototype section compensates for the falling-off of attenuation of the derived section beyond the frequency of infinite attenuation. (4)

4.4 4.4.1 Low-pass filter (1)

4.4.2 The mechanical energy expended is converted to electrical energy. (2)
[11]

QUESTION 5: MODULATION

5.1 At the receiving end of the circuit, the receiver accepts both sidebands and the carrier wave, and uses the carrier wave to demodulate the sidebands to reproduce the original modulating frequencies. (5)

5.2 At the receiving end of the circuit, the receiver accepts both sidebands and the carrier wave, separates them, amplifies the carrier wave and reintroduces it into two separate demodulator circuits to reproduce separately the two original modulating signals. (5)
[10]

QUESTION 6: DEMODULATION

6.1

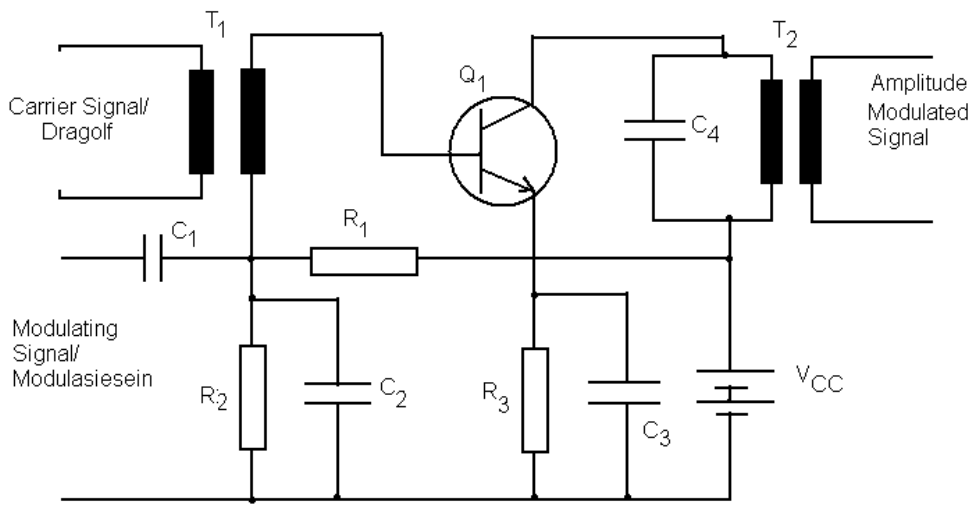

✓✓✓

The carrier signal of the amplifier modulator with base injection is coupled to the base of transistor Q1 by the transformer T1, while the modulating signal is coupled to the base of transformer T1 via capacitor C1. Resistors R1 and R2 provide forward bias to transistor Q1 and form a voltage-dividing network. Capacitors C2 and C3 are bypass capacitors or decoupling capacitors. Resistor R3 is an emitter swamping resistor to limit the current on transistor Q1. The primary winding of transformer T2 and capacitor C4 forms a tuned circuit at the carrier frequency. The carrier signal to the base of transistor Q1 will be amplified, while the modulating signal will determine the amplification of the carrier.✓✓✓✓ (7)

6.2

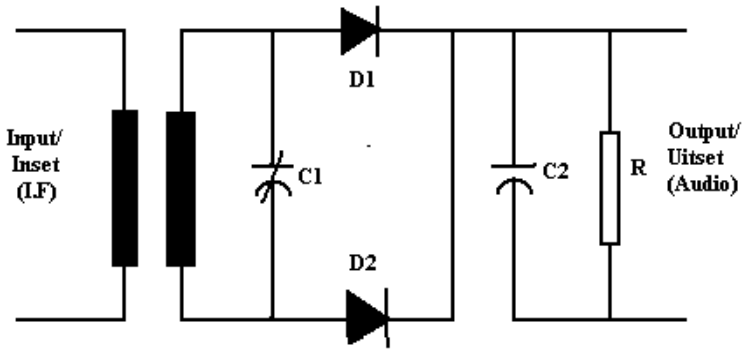

✓✓ (2)

6.3

- Amplitude distortion: It occurs when frequencies are included in the radio wave, but were not contained in the modulated wave.
- Frequency distortion: It occurs where the detector discriminates between modulating frequencies.
- Phase distortion: It occurs where the detector produces different components of the modulated wave at altered phase relations. (3 × 2) (6)

[15]

QUESTION 7: COMMUNICATION SYSTEMS

7.1 FM superheterodyne receiver (1)

7.2
- Antenna: Converts electromagnetic radio waves into electrical RF currents.
- RF amplifier: Amplifies electrical RF currents' signal and uses tuned circuits to select the desired RF carrier signal to which it is tuned.
- Mixer: Combines the incoming RF carrier signal with the local oscillator frequency and mixes the two frequencies to produce the third frequency, which is the difference between the two frequencies and is called the intermediate frequency (IF).
- Oscillator: Generates signal of constant amplitude and frequency, which is to be heterodyned with the incoming RF signal and applied to the mixer to produce the IF.
- IF amplifier: Provides the main amplification to the receiver and gives a high degree of stability to the IF signal.
- Limiter: Prevents amplitude variations by clipping the top and bottom of the RF wave, thereby removing any interference that would otherwise give rise to amplitude variations resulting in distortion.
- FM detector/discriminator: Converts frequency variations into audio signals for amplification.
- AF amplifier: Amplify the audio output from detector to drive the loudspeaker.
- Loudspeaker: Converts electrical audio frequency into mechanical sound waves.
- Power supply unit: Supplies regulated DC voltage to all stages. (10)

[11]

QUESTION 8: RADIO WAVE PROPAGATION

8.1 Travelling wave tube (1)

8.2 A – Heater
B – Cathode
C – Focussing electrode
D – Helix
E – Glass tube
F – Collector (anode)
G – Electron beam
H – Output
I – Input (9)

8.3 Multi-cavity magnetron (1)

8.4 J – Anode poles
K – Output
L – Gaps
M – Cathode
N – Anode
O – Interaction space
P – Anode cavities (7)
[18]

TOTAL: 100

Copyright reserved