higher education & training

Department:
Higher Education and Training
REPUBLIC OF SOUTH AFRICA

T380**(E)**(J26)T

NATIONAL CERTIFICATE

COMMUNICATION-ELECTRONICS N4

(8080224)

26 July 2019 (X-Paper)
09:00–12:00

This question paper consists of 5 pages and 1 formula sheet.

Copyright reserved

DEPARTMENT OF HIGHER EDUCATION AND TRAINING
REPUBLIC OF SOUTH AFRICA

NATIONAL CERTIFICATE
COMMUNICATION-ELECTRONICS N4
TIME: 3 HOURS
MARKS: 100

INSTRUCTIONS AND INFORMATION

1. Answer ALL the questions.
2. Read ALL the questions carefully.
3. Number the answers according to the numbering system used in this question paper.
4. Write neatly and legibly.

Copyright reserved

QUESTION 1: DIRECT-CURRENT THEORY (NETWORK THEOREMS)

1.1 Define *Thévenin's theorem.* (2)

1.2

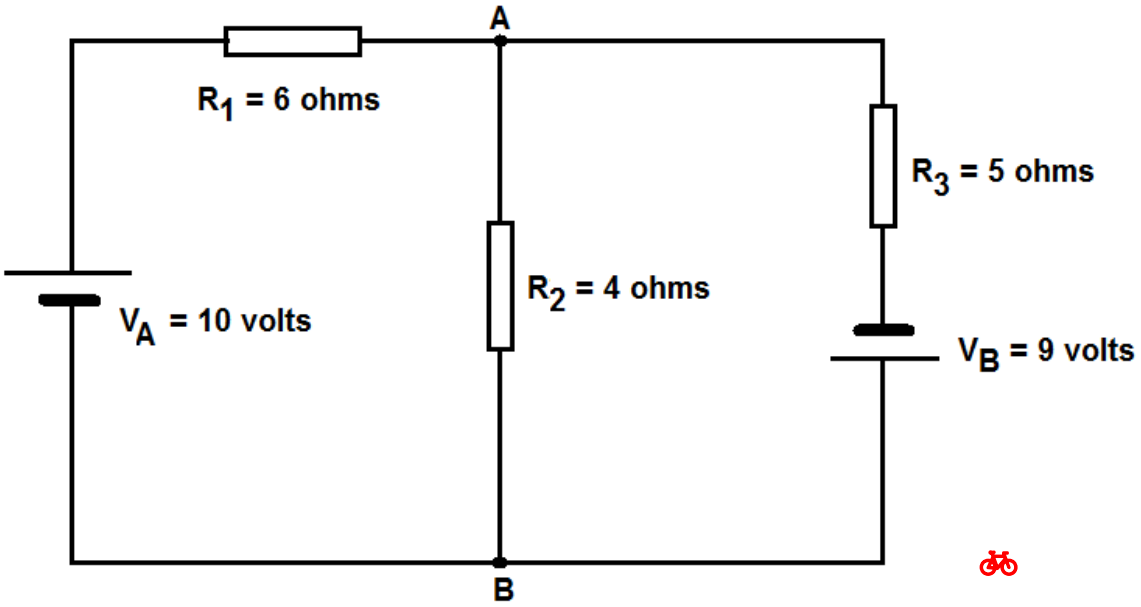

FIGURE 1

Refer to FIGURE 1 and calculate the current that flows through resistor R2. (13)
[15]

QUESTION 2: ALTERNATING-CURRENT THEORY (VECTORS)

2.1 Study FIGURE 2 below and answer the questions.

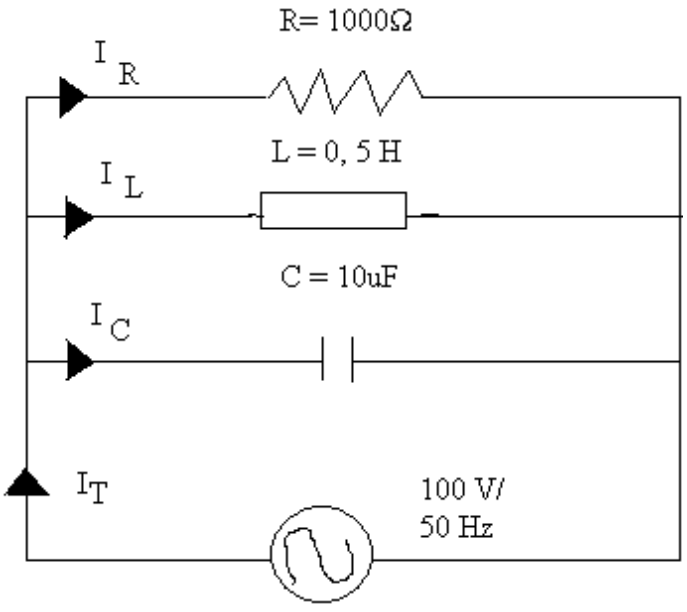

CIRCUIT DIAGRAM
FIGURE 2

Calculate the following:

2.1.1 Total current flowing through the circuit (8)

2.1.2 Phase angle (1)

2.1.3 Draw a phasor diagram (1)

2.2 Use any method to derive the equation for the frequency of an RLC circuit at resonance. (5)
[15]

QUESTION 3: FREQUENCY RESPONSE (FILTERS, ATTENUATORS AND RC TIME CONSTANTS)

3.1 Name THREE elements of a filter. (3)

3.2 Explain the construction or design of a basic band-pass filter. (3)

3.3 Draw a fully labelled circuit diagram for each of the following attenuators:

3.3.1 T-type

3.3.2 L-type

(2 × 2) (4)
[10]

QUESTION 4: MODULATION

4.1 Define each of the following pulse modulations:

4.1.1 Pulse modulation

4.1.2 Pulse-position modulation

4.1.3 Pulse-width modulation

4.1.4 Pulse-amplitude modulation

(4 × 2) (8)

4.2 Explain the process that takes place at the receiving end of the circuit during an independent side-band transmission. (3)

4.3 Explain FOUR differences between *amplitude modulation (AM)* and *frequency modulation (FM)* systems. (4)
[15]

Copyright reserved

QUESTION 5: DEMODULATION

5.1 Explain the function of discriminators in FM receivers. (3)

5.2 Explain, with a neatly labelled circuit diagram, the operation of an amplitude-modulated transistor amplifier with base injection. (12)
[15]

QUESTION 6: COMMUNICATION SYSTEMS

Explain the function of each stage in the block diagram shown in FIGURE 3.

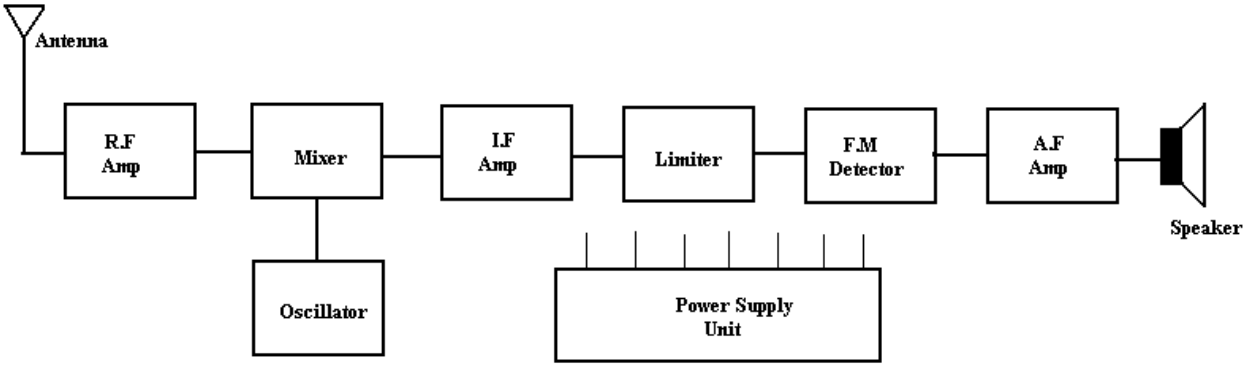

FIGURE 3 (10 × 2) **[20]**

QUESTION 7: RADIO-WAVE PROPAGATION

7.1 Define, with a labelled diagram, *refraction* in the ionosphere. (5)

7.2 Define each of the following terms with reference to radio-wave propagation:

7.2.1 Skip distance

7.2.2 Critical angle

(2 × 1) (2)

7.3 Determine the length of a standard half-wave dipole antenna used to receive a 60 MHz radio signal. Assume that the velocity of the electromagnetic wave in the antenna is 3×10^8 m/s. (3)
[10]

TOTAL: 100

Copyright reserved

FORMULA SHEET

1. $I = \frac{V}{R}$
2. $X_L = 2\pi fL$
3. $X_C = \frac{1}{2\pi fc}$
4. $Z = \sqrt{R^2 + (X_L - X_C)^2}$
5. $I = \frac{V}{Z}$
6. $V_R = I \,.\, R$

   $V_L = I \,.\, X_L$

   $V_C = I \,.\, X_C$
7. $Cos\phi = \frac{R}{Z}$
8. $I = \sqrt{I_R + I_C^2}$
9. $\theta = Tan^{-1}\,\frac{I_C}{I_R}$
10. $I = \sqrt{I_R^2 + I_L^2}$
11. $I = \sqrt{I_R^2 \;\; + (I_L - L_C)^2}$
12. $\theta = Tan^{-1}\,\frac{(I_L - I_C)}{I_R}$
13. $f_r = \frac{1}{2\pi\sqrt{LC}}$
14. $C = \frac{1}{4 \,.\, \pi^2 \,.\, f_r^2 \,.\, L}$
15. $L = \frac{1}{4 \,.\, \pi^2 \,.\, f_r^2 \,.\, C}$
16. $Q = \frac{X_L}{R} = \frac{1}{R}\sqrt{\frac{L}{C}} = \frac{f_R}{bandwidth}$
17. $V_c = V \times Q \; and \;\; V_L = V \times Q$
18. $Z = \frac{L}{CR}$
19. $I_c = I \times Q$
20. $I_L = I \times Q$
21. $f = \frac{\nu}{\lambda}$
22. $B - W = \frac{R}{2\pi L}$
23. $V_T = \sqrt{V_R{}^2 + (V_C - V_L)^2}$

Copyright reserved