higher education & training

Department:
Higher Education and Training
REPUBLIC OF SOUTH AFRICA

MARKING GUIDELINE

NATIONAL CERTIFICATE

COMMUNICATION-ELECTRONICS N4

26 JULY 2019

This marking guideline consists of 8 pages.

Copyright reserved

QUESTION 1: DIRECT-CURRENT THEORY (NETWORK THEOREMS)

1.1 Any network can be viewed as a two-terminal network and can be replaced by a single source of emf in series with single resistance. (2)

1.2

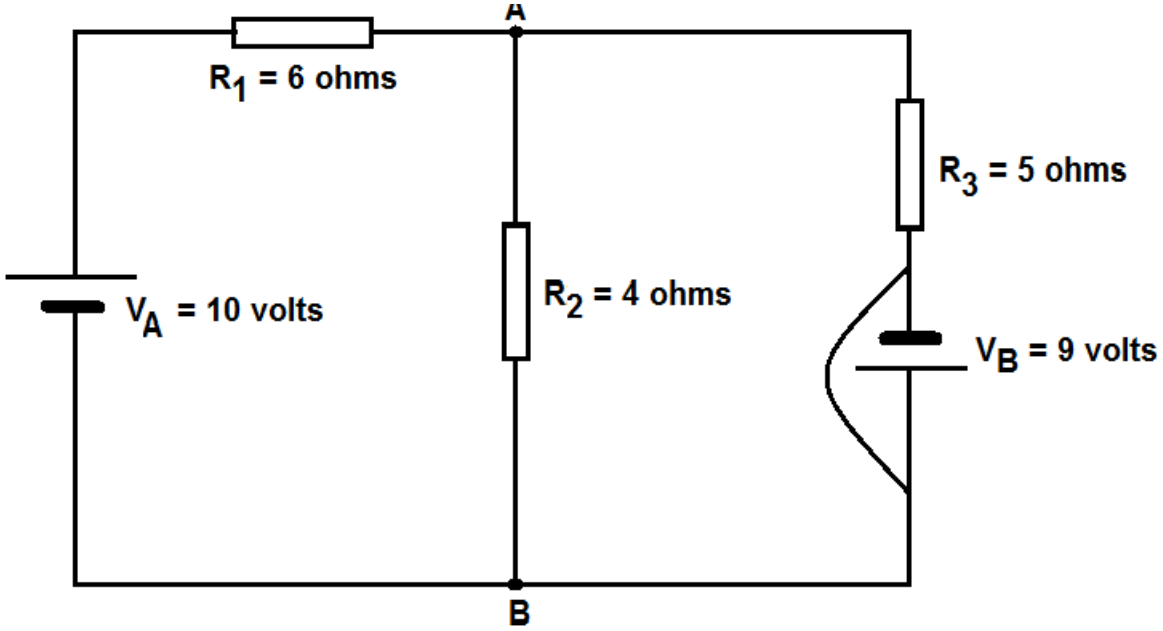

$$RT = R1 + \frac{R_2 \times R_3}{R_2 + R_3}$$

$$= 6 + \frac{4 \times 5}{4 + 5}$$

$$= 8{,}22\ \Omega$$

$$I2 = \frac{V_1}{R_T} \times \frac{R_3}{(R_2 + R_3)}$$

$$= \frac{10}{8{,}22} \times \frac{5}{(5 + 4)}$$

$$= 0{,}68 \text{ A direction A to B}$$

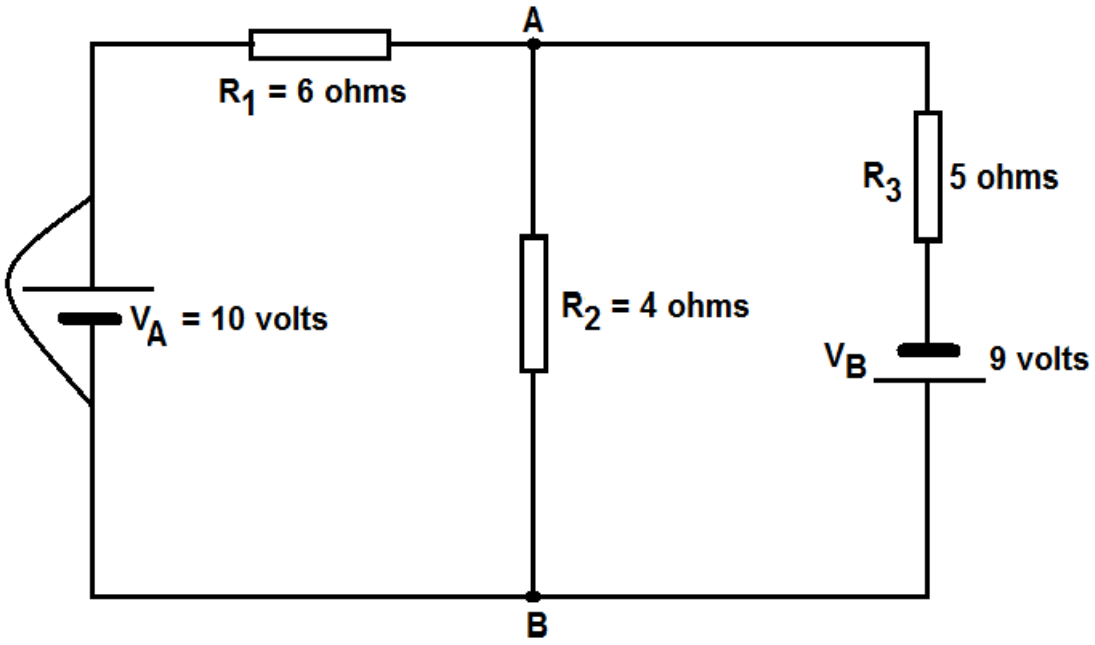

$$RT = R3 + \frac{R_2 \times R_3}{R_2 + R_3}$$

$$= 5 + \frac{4 \times 6}{4 + 6}$$

$$= 7{,}4\ \Omega$$

$$I4 = \frac{V_2}{R_T} \times \frac{R_1}{(R_1 + R_2)}$$

$$= \frac{9}{7{,}4} \times \frac{6}{(6+4)}$$

$$= 0{,}73 \text{ A direction B to A}$$

$$I_{R2} = I_4 - I_2$$
$$= 0{,}73 - 0{,}68$$
$$= 0{,}05 \text{ A or } 50 \text{ mA direction B to A}$$ (13)

[15]

QUESTION 2: ALTERNATING-CURRENT THEORY (VECTORS)

2.1 2.1.1

$$I_R = \frac{V}{R}$$

$$I_R = \frac{100}{1\,000}$$

$$I = 0{,}1 \text{ A}$$

$$I_L = \frac{V}{X_L}$$

$$= \frac{V}{2 \times \pi \times f \times L}$$

$$I_L = \frac{100}{2\pi \times 50 \times 0{,}5}$$

$$= 0{,}637 \text{ A}$$

$$I_C = \frac{V}{X_C}$$

$$= \frac{\frac{V}{1}}{2 \times \pi \times f \times C}$$

$$= \frac{V \times 2 \times \pi \times f \times C}{10^{-6}}$$

$$= \frac{100 \times 2\pi \times 50 \times 10}{10^6}$$

$$= 0{,}314 \text{ A}$$

$$I_X = I_L - I_C$$

$$= 0{,}637 - 0{,}314$$

$$= 0{,}323 \text{ A} \quad (8)$$

2.1.2

$$\text{IT} = \sqrt{I_{R^2} + I_{X^2}}$$

$$= \sqrt{0{,}1^2 + 0{,}323^2}$$

$$= 0{,}338 \text{ A}$$

$$= \tan^{-1} \frac{0{,}323}{0{,}1}$$

$$= 72^\circ 46'' \quad (1)$$

2.1.3

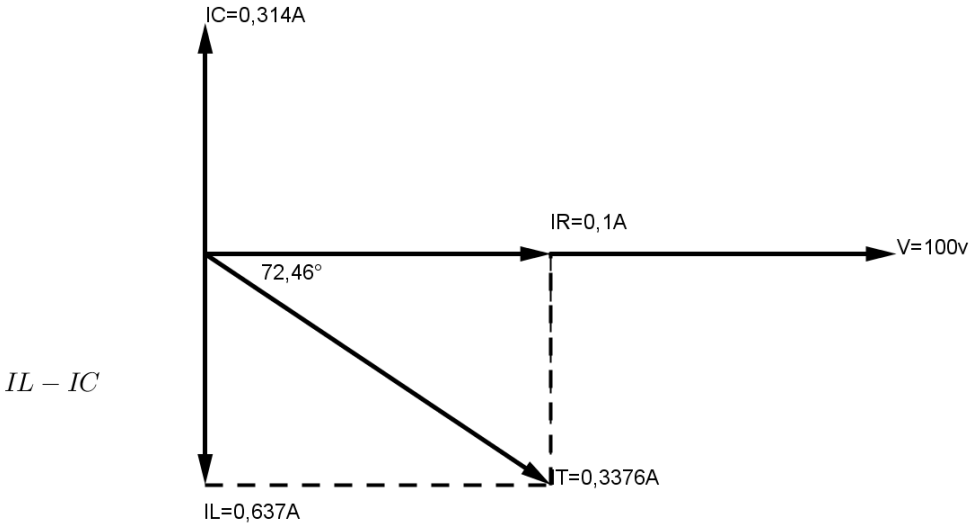

(1)

2.2

$$XL = XC$$

$$2\pi fL = \frac{1}{2\pi fC}$$

$$(2\pi)^2 f^2 LC = 1$$

$$f^2 = \frac{1}{(2\pi)^2 LC}$$

$$\therefore f = \frac{1}{2\pi\sqrt{LC}}$$

(5)
[15]

QUESTION 3: FREQUENCY RESPONSE (FILTERS, ATTENUATORS AND RC TIME CONSTANTS)

3.1
- Passband
- Attenuation band
- Cut-off frequency

(3)

3.2 The basic band-pass filter is constructed by connecting a low-pass filter in series with a high-pass filter. The cut-off frequency of the low-pass filter must be higher than the cut-off frequency of the high-pass filter. (3)

3.3 3.3.1

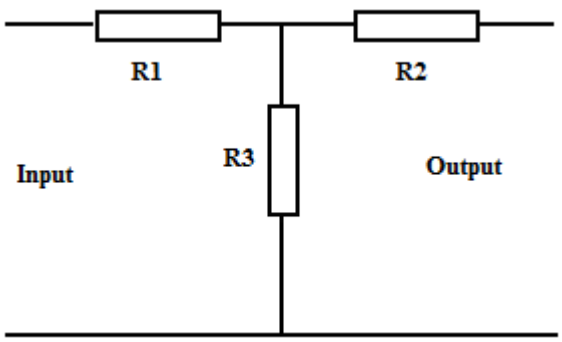

3.3.2

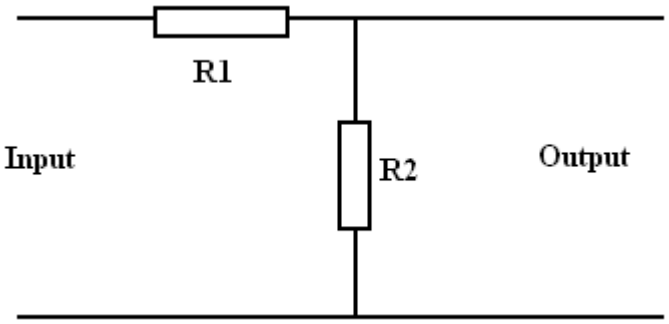

(2 × 2) (4)
[10]

QUESTION 4: MODULATION

4.1 4.1.1 Process whereby the amplitude of a train of digital pulses is made to vary in proportion to the amplitude of the modulating signal

4.1.2 Process whereby the position of the pulse-carrier wave is made to vary in accordance with the instantaneous value of the modulating signal

4.1.3 Process whereby the width of the pulse-carrier wave is made to vary in accordance with the instantaneous value of the modulating signal

4.1.4 Process whereby the amplitude of the pulse-carrier wave is made to vary in accordance with the instantaneous value of the modulating signal

(4 × 2) (8)

4.2 During transmission of the independent sideband, at the receiving end of the circuit, the receiver accepts both sidebands and the carrier wave, separates them, amplifies the carrier wave and reintroduces it into two separate demodulator circuits to reproduce separately the two original modulating signals. (3)

4.3
- In AM the amplitude of the carrier is varied whereas in FM the carrier frequency is varied.
- AM produces two sets of sidebands and is a narrow-band system, whereas FM produces a large set of sidebands and is a broadband system.
- FM gives a much better signal-to-noise ratio than AM under similar operating conditions.
- FM transmission can take place any time of the day or night while AM cannot be ionespherically propagated during the day. (4)

[15]

QUESTION 5: DEMODULATION

5.1 Discriminators are used in FM receivers to convert changes in frequency to correspond with amplitude changes to extract the modulation from the FM wave. (3)

5.2

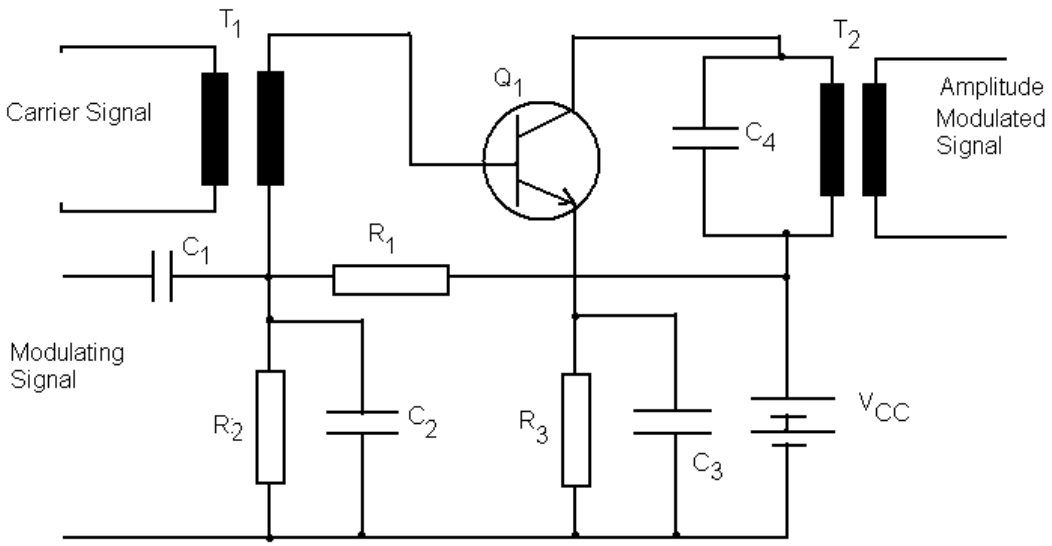

The carrier signal is coupled to the base of Q1 by the transformer T1 and the modulating signal is coupled to the base of Q1 by the capacitor C1. The voltage divider R1R2 establishes a quiescent forward bias for Q1. The modulating signal being applied at R2 causes the base bias to increase and decrease with variations in the modulating signal. Capacitor C1 bypasses the alternating currents around R2 to maintain a constant quiescent operating point. Resistor R3 is an emitter swamping resistor and C3 bypasses the carrier-signal frequency. Transformer T2 couples the modulated carrier signal to the load on the amplifier. (12)
[15]

QUESTION 6: COMMUNICATION SYSTEMS

- Antenna: Converts electromagnetic waves into minute electrical currents
- RF amplifier: Amplifies signal to which it is tuned
- Mixer
  - Input: RF + oscillator frequency (carrier)
  - Output: IF, three other frequencies + noise
- Oscillator: Generates signal of constant amplitude and frequency (carrier)
- IF amplifier: Amplifies intermediate frequency (RF + carrier)
- Limiter: Prevents amplitude variations
- FM detector: Changes frequency variations to voltage variations
- AF amplifier: Amplifies the audio output from detector to drive the loudspeaker
- Loudspeaker: Converts audio signal to sound
- Power supply unit: Regulates DC voltage to all stages (10 × 2) **[20]**

Copyright reserved

QUESTION 7: RADIO-WAVE PROPAGATION

7.1

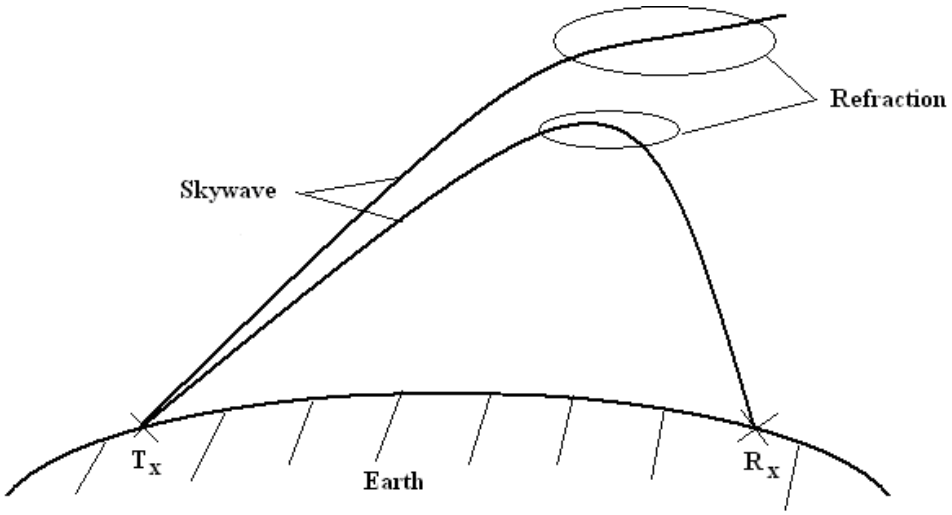

It is the bending of a path of a wave due to change in velocity when it passes from one medium to another. (5)

7.2 7.2.1 Distance from the transmitter to a point where the sky-wave signal is first heard. It is dependent on the critical angle and the ionosphere layer heights.

7.2.2 It is the angle between the norm and the radiated sky wave for a given M.U.F. where the wave is first refracted back without penetration.

(2 × 1) (2)

7.3

$$\lambda = \frac{V}{f}$$

$$= \frac{3 \times 10^8}{60 \times 10^6}$$

$$= 5 \text{ m}$$

length of the antenna is 5/2 = 2,5 m (3)

[10]

TOTAL: 100

Copyright reserved