higher education & training

Department:
Higher Education and Training
REPUBLIC OF SOUTH AFRICA

T380**(E)**(J24)T

NATIONAL CERTIFICATE

COMMUNICATION-ELECTRONICS N4

(8080224)

24 July 2018 (X-Paper)
09:00–12:00

This question paper consists of 5 pages and 1 formula sheet.

Copyright reserved

DEPARTMENT OF HIGHER EDUCATION AND TRAINING
REPUBLIC OF SOUTH AFRICA

NATIONAL CERTIFICATE
COMMUNICATION-ELECTRONICS N4
TIME: 3 HOURS
MARKS: 100

INSTRUCTIONS AND INFORMATION

1. Answer ALL the questions.
2. Read ALL the questions carefully.
3. Number the answers correctly according to the numbering system used in this question paper.
4. Write neatly and legibly.

Copyright reserved

QUESTION 1: DIRECT CURRENT THEORY (NETWORK THEOREMS)

1.1 Differentiate between the TWO Kirchoff's laws:

1.1.1 Current law

1.1.2 Voltage law

(2 × 3) (6)

1.2 Explain the inter relation between the networks: nortons and thevenin, in terms of impedance. (2)

1.3 Define a *phasor.* (4)
[12]

QUESTION 2: ALTERNATING CURRENT THEORY (VECTORS)

2.1 An AC supply of 50 V is applied across a coil having an inductive reactance of 12 Ω and a resistance of 5 Ω.

Calculate the following:

2.1.1 Total current (5)

2.1.2 Phase angle (6)

2.1.3 Power factor (2)

2.1.4 Draw the phasor diagram (2)

2.2 With the aid of THREE labelled diagrams explain the operation of a pure inductive circuit when an alternating voltage is applied across an inductor. (5)
[20]

QUESTION 3: FREQUENCY RESPONSE (Filters, Attenuators and RC Time Constants)

3.1 Explain in detail the construction of a composite filter. (5)

3.2 Explain the principle of piezoelectric effect on a crystal filter. (5)

3.3 Explain FOUR requirements an attenuator must provide as a resistance network to reduce voltage, current or power in controllable and known amounts that are independent of frequency. (4)

Copyright reserved

3.4 Differentiate between the TWO RC circuits below in terms of the output voltage and the waveform of the output.

3.4.1 RC integrator circuit

3.4.2 RC differentiator circuit

(2 × 4) (8)
[22]

QUESTION 4: MODULATION

4.1 Define *phase modulation.* (3)

4.2 Explain the process that takes place at the receiving end of the circuit during the transmission of the double side band transmission. (4)

4.3 Explain THREE main reasons for using single-sideband (reduced carrier) working for point-to-point communication. (6)

4.4 Explain the purpose of a carrier wave in telecommunication. (3)
[16]

QUESTION 5: DEMODULATION

5.1 Explain the process of demodulation. (3)

5.2 With a neatly labelled circuit diagram, explain the operation of a ratio detector. (7)
[10]

QUESTION 6: COMMUNICATION SYSTEMS

Identify the block diagram below and explain the function of each stage.

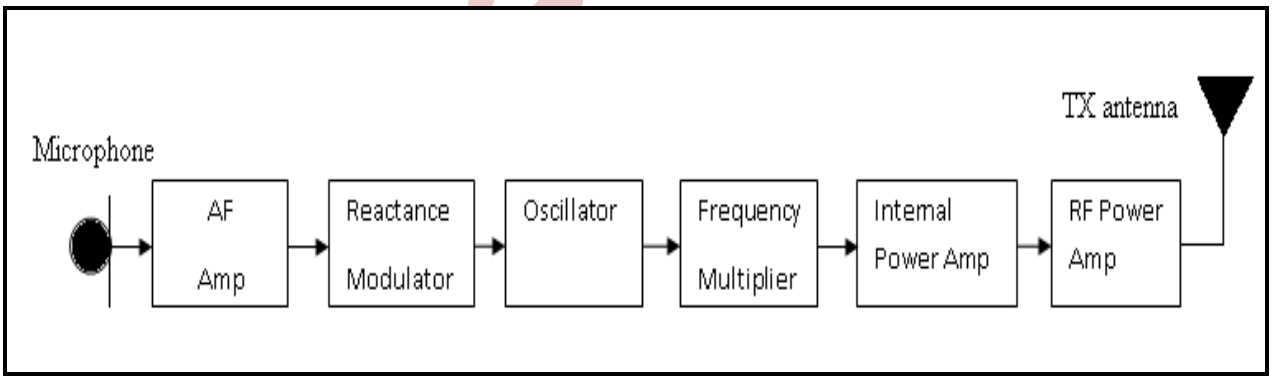

[10]

QUESTION 7: RADIO WAVE PROPAGATION

Define the concepts as it relate to antennas:

7.1 Power gain

7.2 Antenna losses

7.3 Beam width

7.4 Radiation resistance

7.5 Polarisation

(5 × 2) **[10]**

TOTAL: 100

Copyright reserved

COMMUNICATION-ELECTRONICS N4

FORMULA SHEET

1. $I = \frac{V}{R}$
2. $X_L = 2\pi fL$
3. $X_C = \frac{1}{2\pi fc}$
4. $Z = \sqrt{R^2 + (X_L - X_C)^2}$
5. $I = \frac{V}{Z}$
6. $V_R = I \,.\, R$

   $V_L = I \,.\, X_L$

   $V_C = I \,.\, X_C$
7. $Cos\phi = \frac{R}{Z}$
8. $I = \sqrt{I_R + I_C^2}$
9. $\theta = Tan^{-1}\frac{I_C}{I_R}$
10. $I = \sqrt{I_R^2 + I_L^2}$
11. $I = \sqrt{I_R^2 \ + (I_L - L_C)^2}$
12. $\theta = Tan^{-1}\frac{(I_L - I_C)}{I_R}$
13. $f_r = \frac{1}{2\pi\sqrt{LC}}$
14. $C = \frac{1}{4 \,.\, \pi^2 \,.\, f_r^2 \,.\, L}$
15. $L = \frac{1}{4 \,.\, \pi^2 \,.\, f_r^2 \,.\, C}$
16. $Q = \frac{X_L}{R} = \frac{1}{R}\sqrt{\frac{L}{C}} = \frac{f_R}{bandwidth}$
17. $V_c = V \times Q \; and \; V_L = V \times Q$
18. $Z = \frac{L}{CR}$
19. $I_c = I \times Q$
20. $I_L = I \times Q$
21. $f = \frac{\nu}{\lambda}$
22. $B - W = \frac{R}{2\pi L}$
23. $V_T = \sqrt{V_R{}^2 + (V_C - V_L)^2}$

Copyright reserved