higher education & training

Department:
Higher Education and Training
REPUBLIC OF SOUTH AFRICA

MARKING GUIDELINE

NATIONAL CERTIFICATE

COMMUNICATION-ELECTRONICS N4

1 April 2021

This marking guideline consists of 8 pages.

Copyright reserved

QUESTION 1

1.1 False
1.2 False
1.3 True
1.4 True
1.5 False
1.6 True
1.7 False
1.8 True
1.9 False
1.10 False

(10 × 1) **[10]**

QUESTION 2: NETWORK THEOREMS

2.1 2.1.1 Any two terminal networks of impedances and generators may be replaced by a single-current generator I_N and parallel impedance R_N.

2.1.2 In any network with two or more supplies the current in different circuits may be calculated considering each supply separately.

(2 × 2) (4)

2.2 Remove load and short-circuit battery

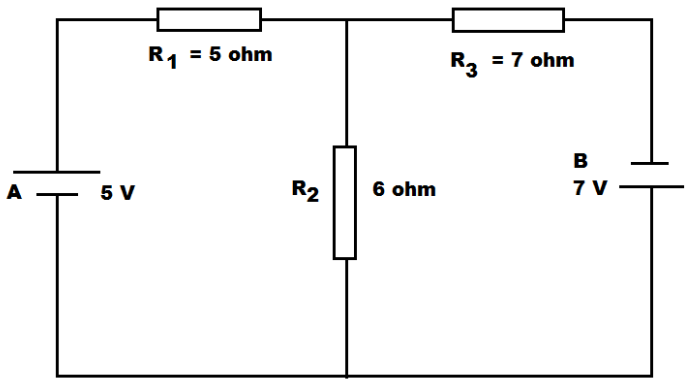

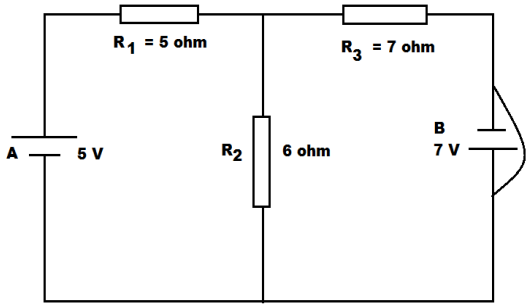

Short-circuited battery B

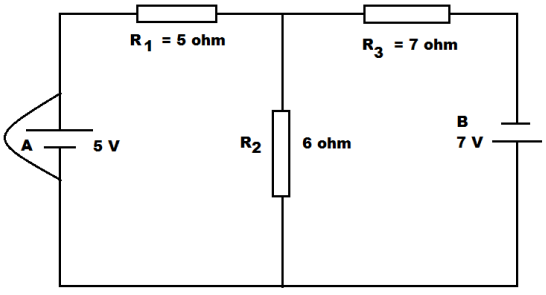

Short-circuited battery A

$R_T = R_1 + \frac{R_2 \times R_3}{R_2 + R_3}$
$= 5 + (7 \times 6)/(7 + 6)$
$= 8{,}23$ ohms✓

$I_T = 5/8{,}23 = 0{,}61$ A✓

$I_2 = I_T \times \frac{R_3}{R_2 + R_3}$
$= 0{,}61 \times \frac{7}{6 + 7}$
$= 0{,}33$ A✓

$R_T = R_3 + \frac{R_1 \times R_2}{R_1 \times R_2}$
$= 7 + (5 \times 6)/(5 + 6)$
$= 7{,}28$ ohms✓

$I_T = 7/7{,}28 = 0{,}96$ A✓

$I_2 = I_T \times \frac{R_1}{R_2 + R_1}$
$= 0{,}96 \times \frac{5}{5 + 6}$
$= 0{,}44$ A✓

Current through $R_2 = 0{,}44 - 0{,}33$
$= 0{,}11$ A✓ (7)
[11]

QUESTION 3: ALTERNATING CURRENT THEORY

3.1 3.1.1 $F_r = 1\ 1/(2\pi \sqrt{LC})$
$= 1/(2\pi \sqrt{12 \times 10^{-3} \times 220 \times 10^{-9}})$
$= 3{,}1$ kHz✓✓

3.1.2 B-W $= R/(2\pi L)$
$= 10/(2\pi \times 12 \times 10^{-3})$
$= 132{,}63$ Hz✓✓

3.1.3 Q-factor $= R^{-1}(\sqrt{L/C})$
$= 10^{-1}(\sqrt{12 \times 10^{-3}/220 \times 10^{-9}})$
$= 23{,}36$✓✓

3.1.4 $Z_T = R$
$= 10\ \Omega$✓✓

(4 × 2) (8)

3.2 Q-factor $= 2\pi f L/R$
$= 2\pi \times 3{,}1 \times 10^3 \times 12 \times 10^{-3}/10$
$= 23{,}37$✓✓ (2)
[10]

QUESTION 4: ATTENUATORS AND FILTERS

4.1 4.1.1

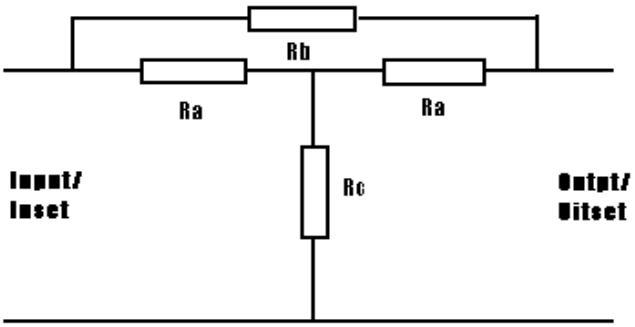

4.1.2

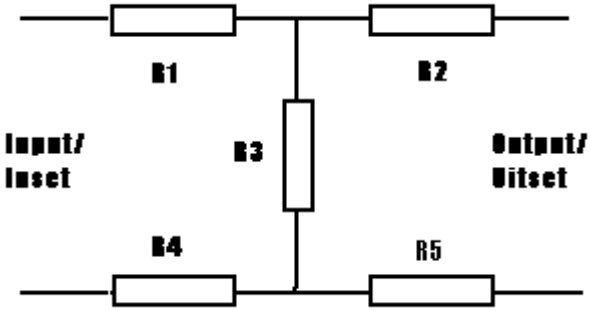

(2 × 2) (4)

4.2 Light-weight, reliable, small and highly sensitive. (2)

4.3 4.3.1

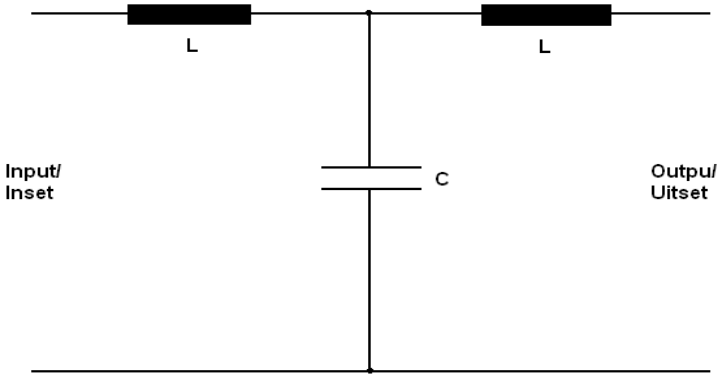

(1)

4.3.2

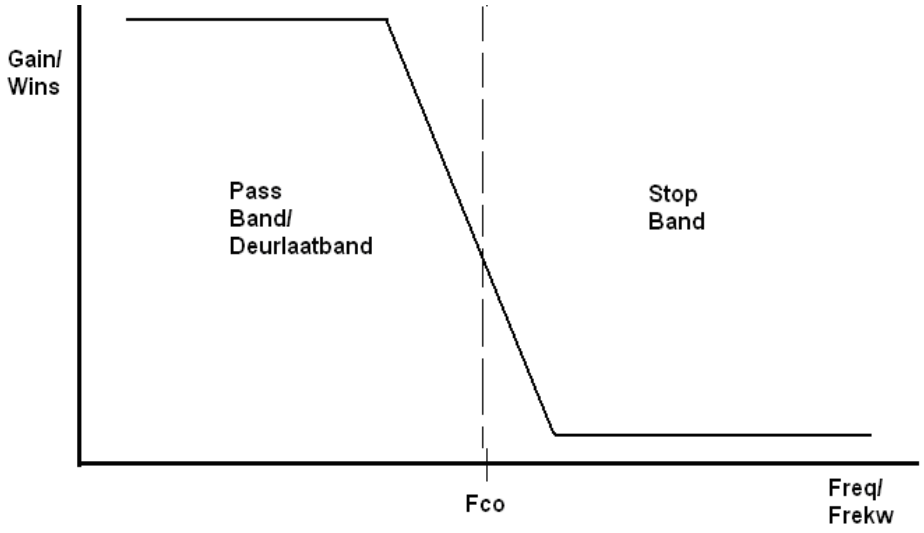

(1)
[8]

QUESTION 5: MODULATION

5.1
- Amplitude modulation
- Frequency modulation
- Phase modulation
- Pulse modulation (4)

5.2 Advantages:
- Signal not sophisticated and can be detected with simple equipment.
- Does not need power source if signal is strong enough.
- Uses narrower bandwidth.

Disadvantages:
- Signal subject to interference from electrical storms such as lightning.
- Transmitted signals cannot be ionospherically propagated diurnally.
- Uses twice the bandwidth to convey same information and only 25% of power used in each side while remaining 50% is expended in carrier. (6)

[10]

QUESTION 6: DEMODULATION

6.1

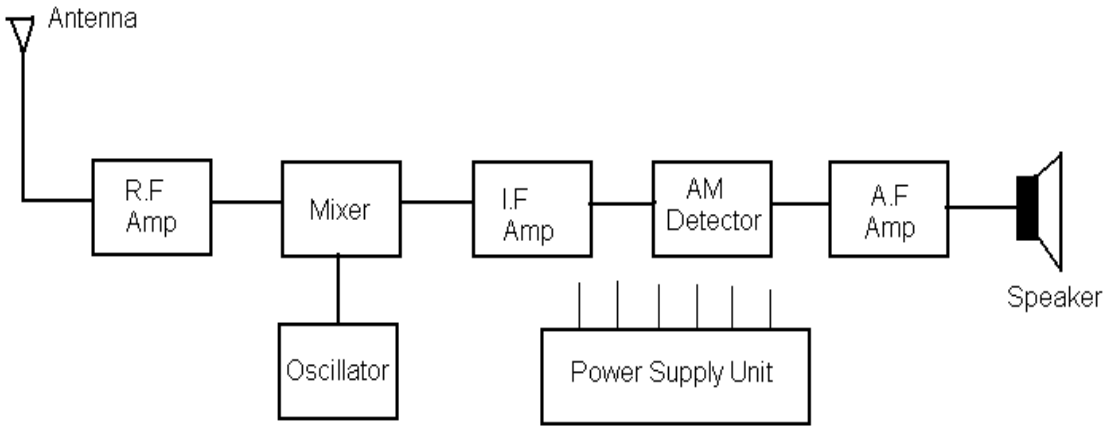

(9)

6.2 6.2.1

$F_M = 9$ kHz
$F_C = 540$ kHz
$F_C - F_M = 540$ kHz $- 9$ kHz
$= 531$ kHz✓
$F_C + F_M = 540$ kHz $+ 9$ kHz
$= 549$ kHz✓ (2)

6.2.2

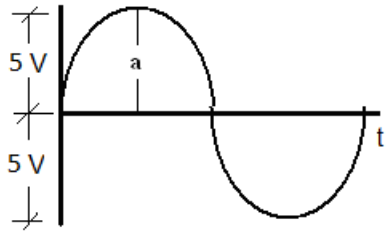

(2)

6.2.3

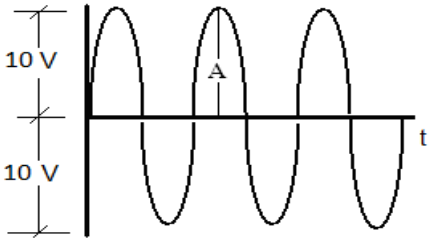

(2)

6.2.4

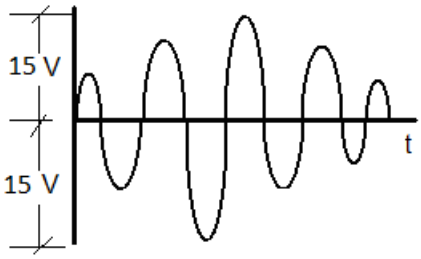

(2)

6.3

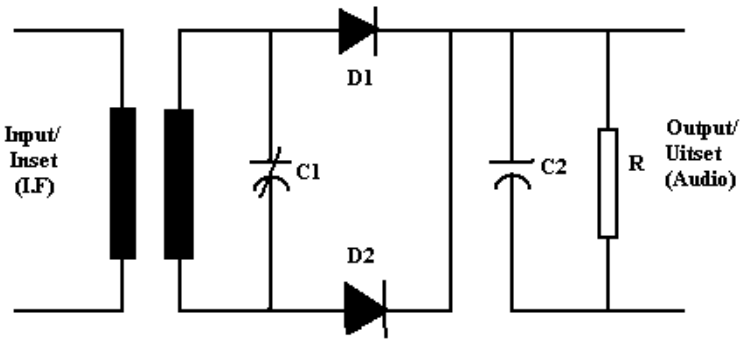

(2)
[19]

QUESTION 7: COMMUNICATION SYSTEMS

7.1 Electromagnetic waves radiated from antenna by coupling output from oscillator to suitable antenna (2)

7.2

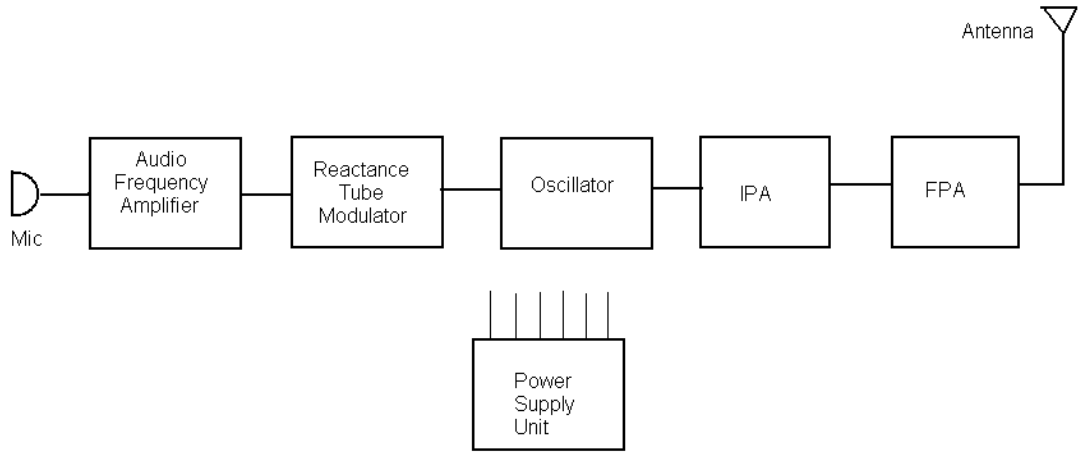

- Microphone converts sound waves to electric currents.
- Speech amplifier amplifies signal from microphone.
- Reactance transistor modulator converts audio intelligence to reactance.
- Oscillator supplies RF signal (carrier) with constant amplitude and frequency.
- Intermediate power amp selects and amplifies oscillator frequency.
- Power amp amplifies modulated carrier to have sufficient energy to drive the antenna circuits.
- Power supply supplies DC to all stages.
- Antenna converts electric currents into electromagnetic waves. (16)

[18]

QUESTION 8: RADIO WAVE PROPAGATION

8.1 Directional antenna radiates energy mainly in one direction while an omnidirectional antenna radiates energy in all directions. (2)

8.2 Distance from transmitter to point where first sky-wave is heard for the first time. Depends upon critical angle and ionosphere layer heights. (2)

8.3 Temperature of sun varies causing variation in ultraviolet radiation. Ultraviolet radiation from sun is main cause of ionisation. Variation in ionisation of ionosphere layers has an effect on radio communication. (2)

8.4 Bending of path of wave due to change in velocity when passing from one medium to another. (2)

8.5 Angular separation between two half-power points on density radiation pattern. (2)

8.6 8.6.1

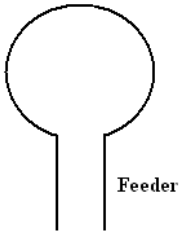

8.6.2

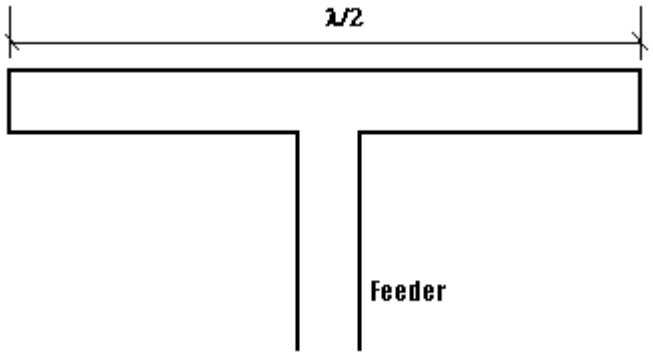

(2 × 2) (4)
[14]

TOTAL : 100

Copyright reserved