higher education & training

Department:
Higher Education and Training
REPUBLIC OF SOUTH AFRICA

MARKING GUIDELINE

NATIONAL CERTIFICATE

COMMUNICATION-ELECTRONICS N4

27 MARCH 2018

This marking guideline consists of 6 pages.

Copyright reserved

QUESTION 1: DIRECT-CURRENT THEORY (NETWORK THEOREMS)

1.1 Nortan's theorem states that any linear active network with two output terminals can be replaced by a single-current source in parallel with a single impedance. (3)

1.2 1.2.1 A passive network is a network which does not contain any source of EMF or resistance.

1.2.2 An active network is a network which contains a source of EMF.
(2 × 3) (6)

1.3 Superposition states that in any linear multiple-source network, the resultant current in any branch is the algebraic sum of the current that would be produced by each source acting separately. (3)
[12]

QUESTION 2: ALTERNATING-CURRENT THEORY (VECTORS)

2.1 2.1.1 $X_L = 2 \times \pi \times f \times L$

$= 2 \times 3,142 \times 50 \times 0,5$
$= 157,1\ \Omega$ ✓

$$X_C = \frac{1}{2 \times \pi \times f \times C}$$

$$= \frac{1}{2 \times 3,142 \times 50 \times 0,000010}$$

$= 318,269\ \Omega$ ✓

$$I_R = \frac{V}{R}$$

$$= \frac{20}{1000}$$
$= 0,02$ A ✓

$$I_L = \frac{V}{X_L}$$

$$= \frac{20}{157,1}$$
$= 0,127$ A ✓

$$I_C = \frac{V}{X_C}$$

$$= \frac{20}{318,269}$$
$= 0,063$ A ✓ (5)

2.1.2 $I_X = I_L - I_C$

$= 0,127 - 0,063$

$= 0,064$ A ✓

$I_T = \sqrt{I_{R^2} + I_{X^2}}$

$= \sqrt{0,02^2 + 0,064}^2$

$= 0,067$ A ✓ (2)

2.1.3 $\Theta = \tan^{-1} \frac{I_X}{I_R}$

$= \frac{0,64}{0,02}$

$= 88,2°$ ✓ (1)

2.2

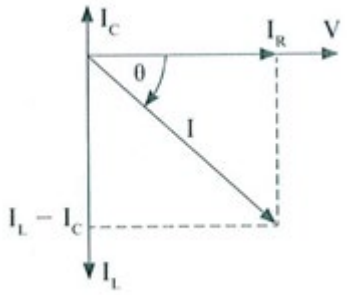

(2)

2.3 2.3.1
- The inductive reactance is equal to the capacitive reactance.
- The circuit impedance is minimum.
- The circuit current is maximum.

2.3.2
- The inductive reactance is equal to the capacitive reactance.
- The circuit impedance is maximum.
- The circuit current is minimum.

(2 × 3) (6)

[16]

QUESTION 3: FREQUENCY RESPONSE (FILTERS, ATTENUATORS AND RC TIME CONSTANTS)

3.1 A composite filter is a combination of the prototype and derived sections connected in tandem and designed to give the required input impedance and sharpness of cut-off frequency. The derived section is designed to give the required sharpness of cut-off frequency. The prototype section compensates for the falling off of attenuation from the derived section beyond the frequency of infinite attenuation. (4)

3.2 The piezoelectric effect is a process whereby when the crystal is placed under mechanical strain, such as compression, expansion, bending and/or twisting, the mechanical energy expended is converted to minute electrical energy. (4)

3.3 It must:

- Provide the correct input impedance
- Provide the correct output impedance
- Provide the correct attenuation
- Be independent of frequency (4)

3.4 3.4.1 In an RC integrator circuit, the output voltage is taken from across the capacitor and the wave of the output form is dependent upon the time constant and the frequency and the shape of the input waveform. The RC product is many times greater than the duration. The interval of the pulses to be integrated is usually sufficient to provide good integration.

3.4.2 In an RC differentiator circuit, the output voltage is taken from across the resistor and the wave of the output form is dependent of the time constant and the frequency and the shape of the input waveform. The RC product should be much smaller than the duration. The interval of the pulses to be differentiated is usually sufficient to provide good differentiation.

(2 × 4) (8)

[20]

QUESTION 4: MODULATION

4.1 Phase modulation is a process whereby the phase of the carrier wave is made to vary in accordance with the instantaneous value of the modulating signal. (2)

4.2 During transmission of the double sideband, at the receiving end of the circuit the receiver accepts both sidebands and the carrier wave and uses the carrier wave to demodulate the sidebands to reproduce the original modulating frequencies. (2)

4.3
- Only a restricted number of receivers are involved and therefore more expensive and sophisticated single-sideband equipment may be used.
- It is economical because there is a considerable saving of power.
- There is a saving in bandwidth because only one sideband is transmitted.

(3 × 2) (6)
[10]

QUESTION 5: DEMODULATION

5.1 The full-wave voltage detector provides more efficient filtering of the intermediate frequency signal because both halves of the modulating waves are rectified, which allows current to flow through the output continually in the same direction. (4)

5.2

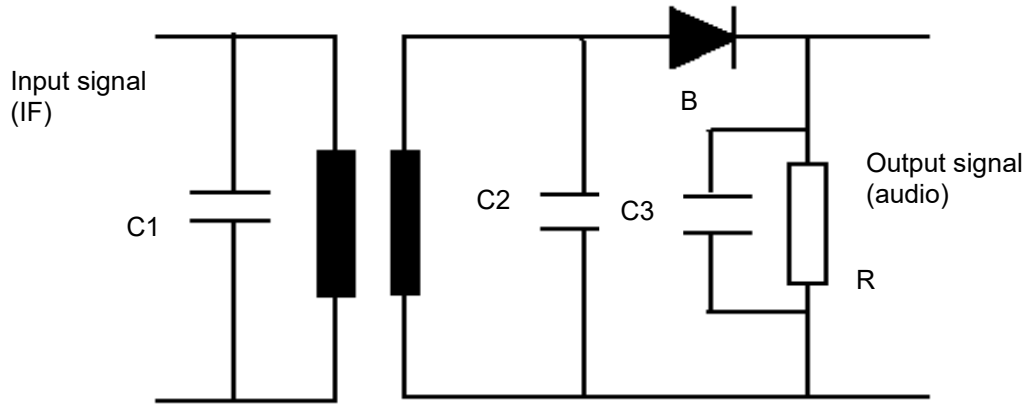

AM HALF-WAVE DETECTOR (6)
[10]

QUESTION 6: COMMUNICATION SYSTEMS

- Antenna: It converts electromagnetic radio waves into an electrical radio frequency current.
- RF amplifier: It matches the input impedance of the receiver to that of the antenna. It uses a tuned circuit to select the desired RF carrier signal. It also provides selectivity to the receiver.
- Mixer: It combines the incoming RF with the frequency of the local oscillator and beats the two frequencies to produce the intermediate frequency which is the difference between the two frequencies.
- Local oscillator: It produces an RF of constant amplitude and fixed difference frequency above or below the incoming RF. Hence its frequency stability must be particularly high.
- IF amplifier: It provides the main amplification to the receiver and gives a high degree of stability to the IF signal.
- Limiter: It clips the top and bottom of the RF wave thereby removing any interference which would otherwise give rise to amplitude variations resulting in distortion.
- Discriminator: It discriminates between the carrier and the modulating signal by converting frequency variations into audio signals.
- De-emphasis network: It de-emphasises the two unequal modulating signals where the one coming from the transmitter is artificially boosted and should be corresponding at the receiver to improve noise immunity by compensation at the receiver.
- AF and power amp: It amplifies the audio signal to a value sufficient to drive a loudspeaker.
- Loudspeaker: It converts electrical audio frequency signals into mechanical sound waves. (10 × 2) **[20]**

QUESTION 7: RADIO-WAVE PROPAGATION

7.1 It is an angle that lies between the reflected wave and the norm to the surface of reflection.

7.2 It is an angle that lies between the line of propagation of the wave that strikes the surface and the norm to the surface.

7.3 It is an angle that lies between the wave that is bent or refracted at the plane between two different media and the norm to that plane.

7.4 It is the wave that is projected skyward at a high frequency or acute angle to penetrate the ionosphere but is only bent.

7.5 It is the wave that is projected skyward but only to be reflected by the ionosphere without penetration.

7.6 It is the upper portion of the atmosphere, which continually absorbs large quantities of radiant energy from the sun, thus becoming heated and ionised.
(6 × 2) **[12]**

TOTAL: 100

Copyright reserved