higher education & training

Department:
Higher Education and Training
REPUBLIC OF SOUTH AFRICA

MARKING GUIDELINE

NATIONAL CERTIFICATE

APRIL EXAMINATION

COMMUNICATION-ELECTRONICS N4

8 APRIL 2016

This marking guideline consists of 10 pages.

Copyright reserved

QUESTION 1

1.1 False
1.2 True
1.3 True
1.4 True
1.5 False
1.6 True
1.7 False
1.8 True
1.9 True
1.10 True

(10 × 1) **[10]**

QUESTION 2

2.1 2.1.1 Kirchhoff's voltage law – In any closed circuit the algebraic sum of the products of current and resistance of each part of the circuit is equal to the resultant EMF in the circuit.

2.1.2 Norton's theorem – Any two terminal networks of generators and impedances may be replaced by a single constant current generator IN in parallel with a single Norton's resistance RN.

(2 × 2) (4)

2.2 Remove load and short-circuit battery.

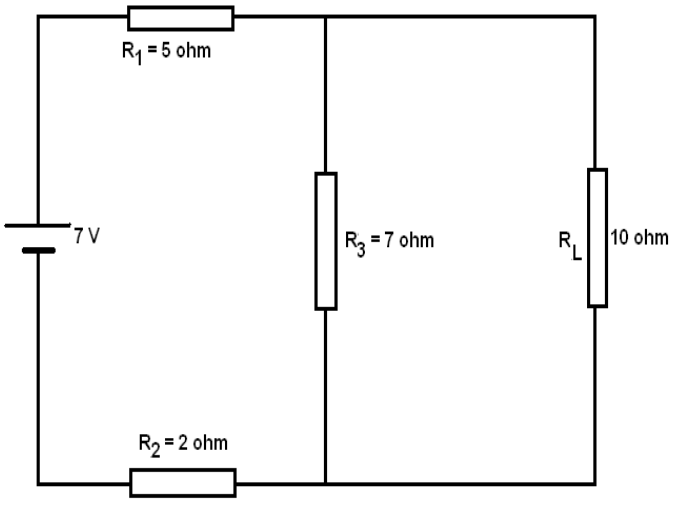

Remove load and short-circuit battery

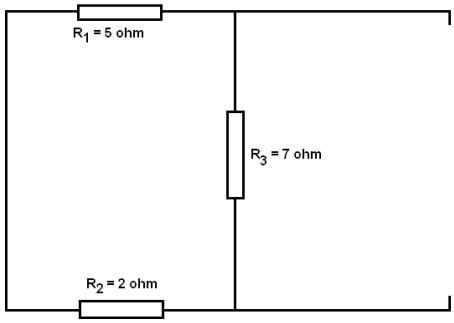

$$R_{AB} = R_N = \frac{R_3 (R_1 + R_2)}{R_3 + (R_1 + R_3)}$$
$$= \frac{7 (5 \times 2)}{7 + 5 + 2)}$$
$$= 3{,}5 \text{ ohm}$$ (2)

Replace battery and short-circuit AB

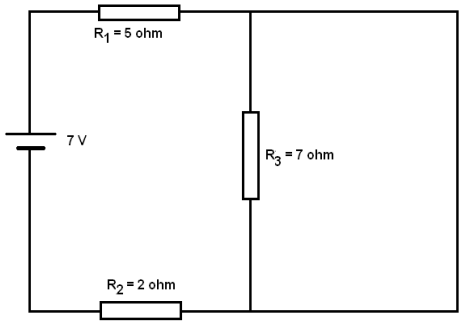

$R_T = R_1 + R_2$
$= 5 + 2$
$= 7 \text{ ohm}$
$I_N = \frac{V}{R_T}$
$= \frac{7}{7}$
$= 1 \text{ A}$ (3)

Norton's equivalent circuit

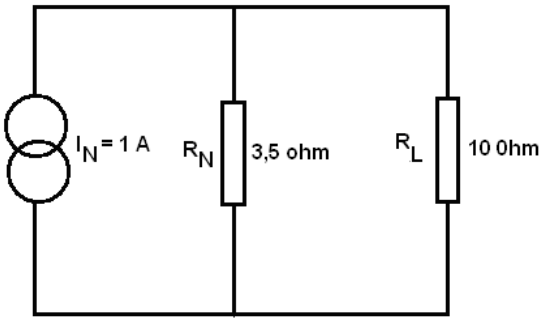

(1)
[10]

QUESTION 3

3.1 $F_r = 1/ (2\pi \sqrt{LC})$
$= 1/(2\pi \sqrt{(200 \times 10^{-6} \times 400 \times 10^{-9})})$
$= 17{,}794$ kHz

3.2 B-W $= R/(2\pi L)$
$= 10/(2\pi \times 200 \times 10^{-6})$
$= 7{,}957$ kHz

3.3 Q-factor $= X_L/R$
$= 2\pi fL/R$
$= 2\pi \times 17{,}794 \times 10^{3} \times 200 \times 10^{-6}/10$
$= 2{,}236$

3.4 B-W $= F_r/Q$
$= 17{,}794 \times 10^{3}/2.236$
$= 7{,}957$ kHz

3.5 Q-factor $= R^{-1}(\sqrt{L/C})$
$= 10^{-1} (\sqrt{(200 \times 10^{-6}/400\ 10^{-9})})$
$= 2{,}236$

(5 × 2) **[10]**

QUESTION 4

4.1 Attenuator – a resistive network designed to reduce voltage, current or power to controllable amounts and which is independent of frequency. (2)

4.2 O-type attenuator

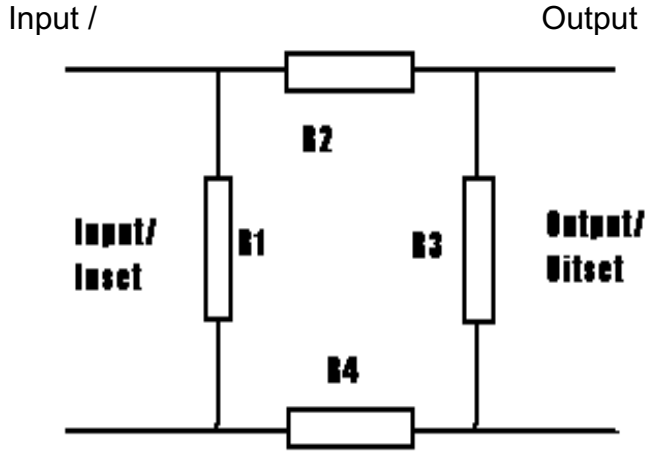

(2)

4.3 Low-pass filter

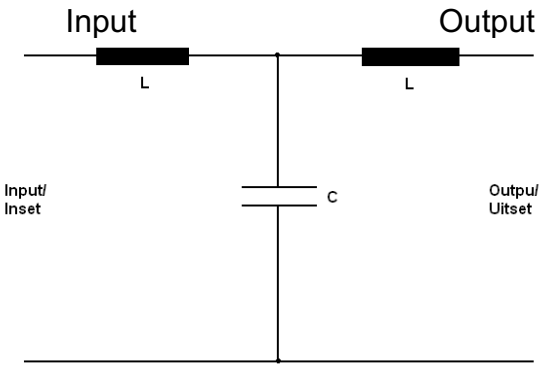

(3)

4.4 How low frequencies are passed and blocked.

For low frequencies
- X_L is low, low frequencies are passed to output
- X_C is high, low frequencies are blocked to ground

For high frequencies
- X_L is high, high frequencies are blocked to output (3)

[10]

QUESTION 5

5.1

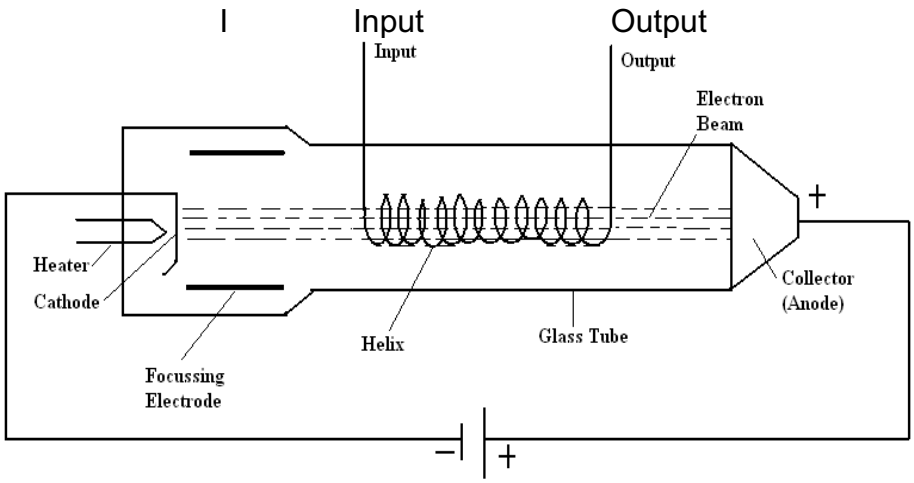

(5)

5.2

- Heater: Heats cathode
- Cathode: Emits electrons
- Focusing electrodes: Hold beam in the centre of the helix
- Tube makes use of the interaction between the electron beam and a travelling-wave signal
- RF signal to be amplified is coupled to input
- RF signal forces the electrons in the beam to slow down and speed up
- Bunches of electrons are formed
- Bunches add energy to RF signal
- As the signal wave proceeds towards the output end of the helix, its amplitude increases exponentially (10)

[15]

QUESTION 6

6.1

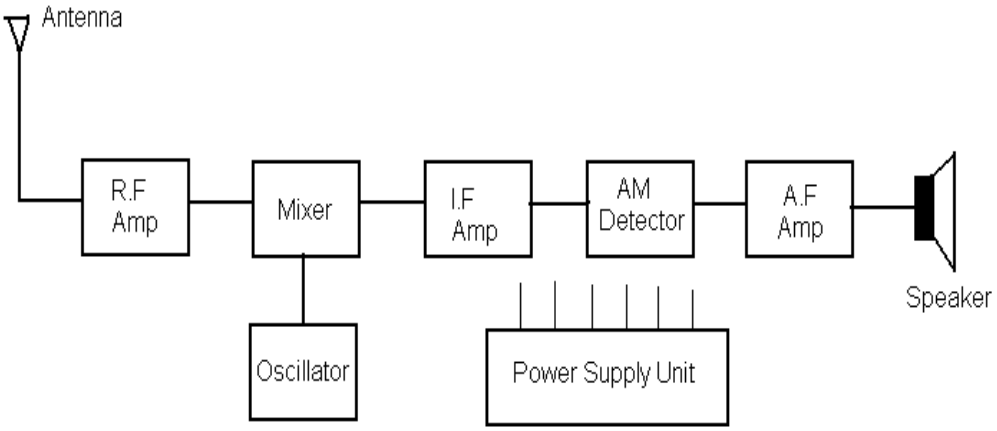

(5)

6.2

- Antenna – Electromagnetic waves are converted into electric current
- RF-amplifier – Amplifies the signal to which it is tuned
- Oscillator – Supplies RF-signal (carrier) of constant amplitude and frequency
- Mixer – Input: RF + carrier (oscillator frequency)
  Output: IF, 3 other frequencies + noise
- IF-amplifier – Amplifies the intermediate frequency
- Detector – Converts IF to audio.
- AF-amplifier – Amplifies the audio signal
- Loudspeaker – Converts audio frequency to sound waves
- Power supply unit – Supplies regulated DC-voltage to all stages (10)

6.3

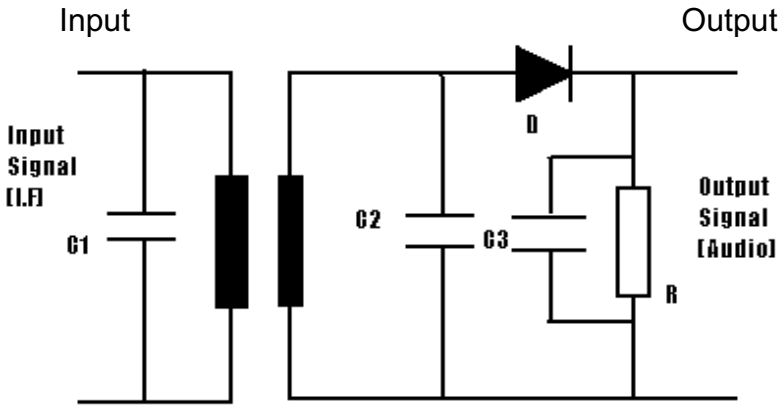

(5)
[20]

QUESTION 7

7.1 FM-Transmitter

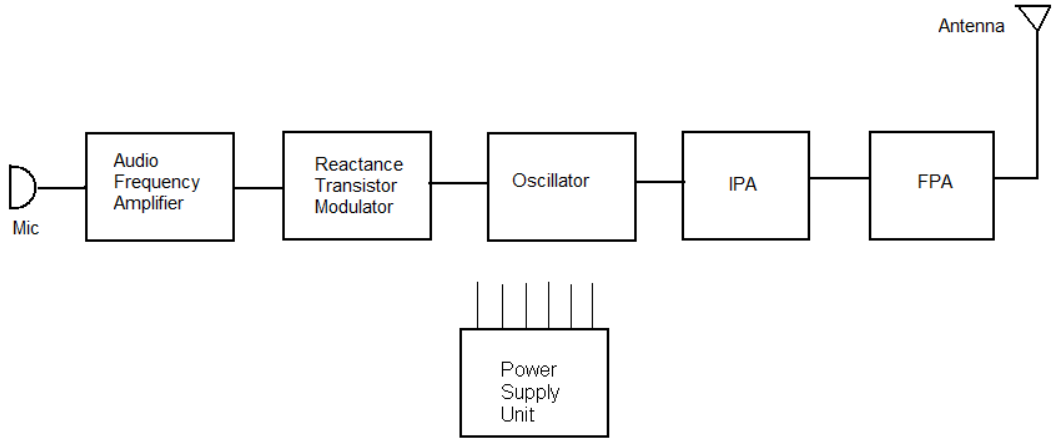

(5)

7.2 RATIO DETECTOR

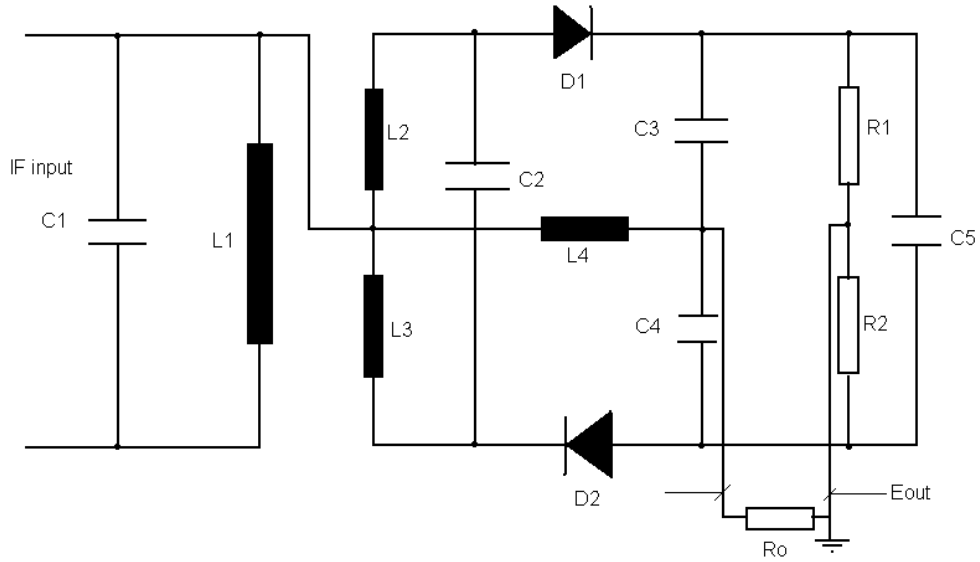

(5)
[10]

QUESTION 8

8.1 8.1.1 Silent zone – the 'silent' region extends from the limit of the useful ground wave to the distant point where the signal is first heard.

8.1.2 Critical frequency – the maximum frequency at which a radio wave directed vertically upwards is refracted by a layer of the ionosphere and above which it penetrates the layer.

8.1.3 Polarisation – refers to the direction space of the electric field which is radiated from the antenna and is parallel to the antenna itself.

(3 × 2) (6)

8.2
- Directional antenna – concentrates radiation mainly in one direction.
- Omnidirectional antenna – radiation in all directions. (2 × 1) (2)

8.3 Day: F region splits up into F_1 and F_2
Night: F_1 layer disappears causing F_2 layer to drop

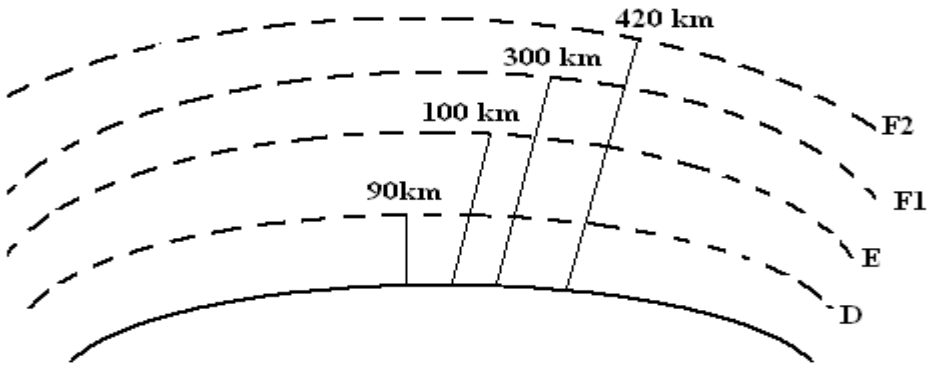

(3)

8.4 8.4.1

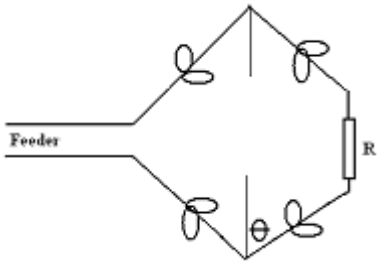

8.4.2

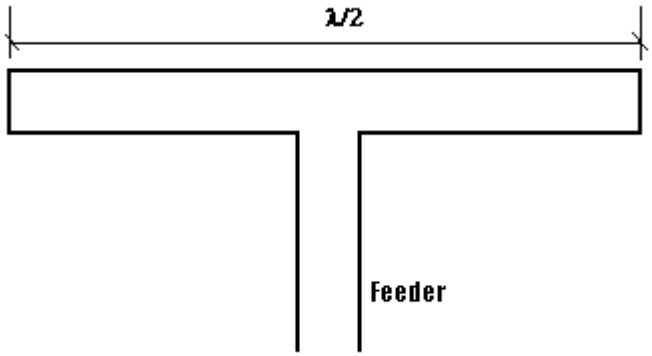

(2 × 2) (4)
[15]

TOTAL: 100

Copyright reserved