higher education & training

Department:
Higher Education and Training
REPUBLIC OF SOUTH AFRICA

MARKING GUIDELINE

NATIONAL CERTIFICATE

CHEMICAL PLANT OPERATION N5

2 August 2021

This marking guideline consists of 6 pages.

Copyright reserved

QUESTION 1

1.1 Heat energy
1.2 Heat required
1.3 Constituent elements
1.4 Particles of water
1.5 Pressure drop
1.6 Parallel
1.7 Blue flame
1.8 Rotating motion
1.9 Hydrogen chloride
1.10 Heavy dry powders

(10 × 2) **[20]**

QUESTION 2

2.1 Q = m [superheated steam – condensate] ✓

= m [hg + (*Cp* ∆T) – *hf*] ✓

= m [hg at 4 000 kPa + (Cp x (500 °C – t at 4 000 kPa) – *hf* at 100 Kpa]

= 1 [(2 800 + (1,97 × (500 – 250,3) – 418] ✓✓*Steam tables*

= 2 873,9 kJ/kg ✓ (5)

2.2 2.2.1 The velocity-compounded turbine, called the Curtis turbine after its designer, is used to employ lower blade speeds✓ and a higher utilisation of the kinetic energy of the steam.✓ In this type of steam turbine, all the expansion or the entire pressure drop takes place in a single set of nozzles✓ and the steam then passes through a series of blades✓ attached to a single wheel or rotor.✓

2.2.2 In a reaction turbine, only part of the pressure drop occurs in the nozzles.✓ The remainder occurs during the passage of the steam through the blades.✓ The blade passages are nozzle-shaped so that the acceleration requires a force (force = mass x acceleration)✓ and a resultant reaction occurs on the blades.✓ The force of the reaction is added to the force resulting from the redirection of the steam to cause the total propulsive force on the blades.✓

(2 × 5) (10)
[15]

QUESTION 3

3.1

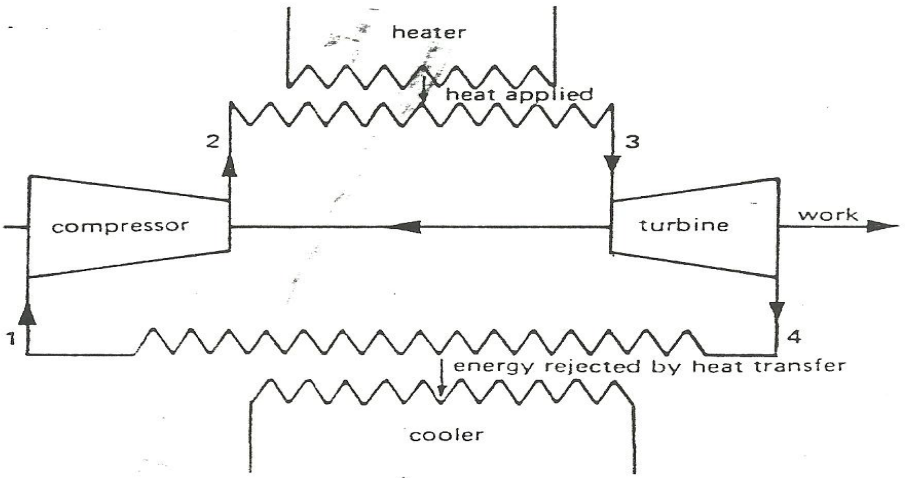

1 mark each for any SIX correct labels (6)

3.2 The fuel oil is preheated and then mixed with the air before sprayed in under pressure.✓ Atomising oil burners spray the fuel from a nozzle or atomise it with air or steam.✓ Combustion air surrounds the fuel nozzle and is blown into the furnace with the fuel spray.✓ Vanes and baffles are built into the air stream to ensure proper air-fuel mixing.✓ (4)

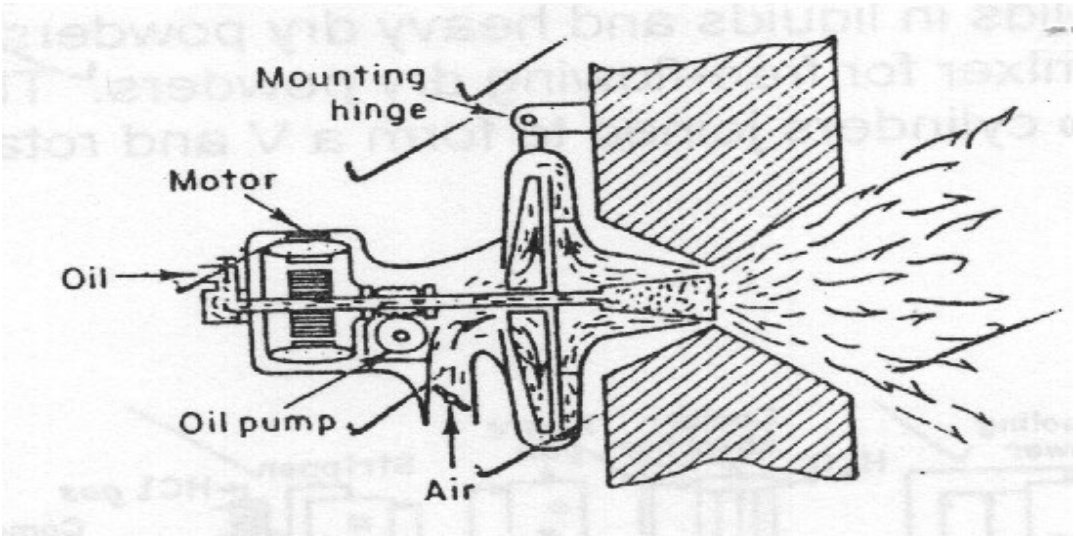

1 mark for each correct label (5)

3.3 3.3.1 This mixer consists of a horizontal trough containing a central shaft and a helical ribbon agitator.✓ Two counteracting ribbons are mounted on the same shaft – one moving slowly in one direction and the other moving quickly in the other direction.✓ Mixing results from the turbulence induced by the agitators. Solids are fed in one end of the trough and discharged from the other.✓ Some ribbon blenders operate in batches, while others mix continuously.✓ They are effective mixers for thin pastes and powders that do not flow readily.✓

3.3.2 Mulling is a smearing rubbing action similar to that used in a pestle and mortar.✓ In large-scale processing, this action is given by the wide, heavy wheels of the mixer.✓ In this particular design of muller, the pan is stationary and the central vertical shafts are driven, causing the muller wheels to roll in a circular path over a layer of solids on the pan floor.✓ The rubbing action results from the slip of the wheels on the solids.✓ Plows guide the solids under the muller wheels or to an opening in the pan floor at the end of the cycle when the mixer is being discharged.✓

3.3.3 Mixing is done by two heavy blades on parallel horizontal shafts turning in a short trough with a saddle-shaped bottom.✓ It involves squashing the mass flat, folding it over onto itself, and then squashing it once more. Most kneading machines also tear the mass apart.✓ The blades turn towards each other, drawing the mass downwards over the point of the saddle, then shearing it between the blades and the wall of the trough.✓ Materials are dropped into the trough and kneaded for 20 minutes. The circles of rotation of the blades are usually tangential so that the blades may turn at different speeds in any ratio. The common sigma blade is used for general purpose kneading.✓ The double-naben or fishtail blade is particularly effective with heavy plastic materials. The dispersion blade develops the high shear forces needed to disperse powders or liquids into plastic or rubbery masses.✓

(3 × 5) (15)
[30]

QUESTION 4

4.1 Basis 100 mol
Ratio N_2:O_2 per volume in air: 79%:21%

Reaction N_2:O_2: $\frac{79}{21} = \frac{75}{x}$ ✓
$x = 19{,}94$ ✓

∴ Amount of input air = 75 + 19,94 = 94,94 ✓

Amount of input C_4H_{10}:Reaction:$C_4H_{10} + 13O_2 \rightarrow 4CO_2 + 5H_2O$ ✓

∴ 1 mol C_4H_{10} = 4 mol CO_2 ✓ (from reaction)

x mol C_4H_{10} = 7 mol CO_2 ✓ (from data)

∴ x = 1,75 ✓
Ratio → C_4H_{10}:air = $\frac{94{,}94}{1{,}75}$ ✓
= 55,85 ✓
Ratio: 55,85 air:1 C_4H_{10} for complete combustion ✓ (10)

4.2
- Equilibrium is an inverse function of temperature and a direct function of the oxygen to sulphur dioxide ratio.
- The rate of reaction is a direct function of temperature.
- The gas composition and number of catalysts affect the rate of conversion and the kinetics of the reaction.
- The removal of sulphur trioxide formed allows more sulphur dioxide to be converted. (4)

4.3 The dust-laden air receives a rotating motion upon entrance into the cylinder.✓ The vortex so formed develops a centrifugal force, which acts to throw the particles radially towards the wall.✓ The path of the air in a cyclone follows a downward vortex or spiral adjacent to the wall and reaching to the bottom of the cone.✓ Particles leave the cyclone at the bottom.✓ The air stream then moves upward in a tighter spiral, concentric with the first, and leaves through the outlet pipe still whirling.✓ Both spirals rotate in the same direction.✓ (6)
[20]

QUESTION 5

5.1 This is steam that does not contain suspended water at all.✓ This means that the steam is at the saturation temperature✓ and has absorbed all of the latent heat of evaporation.✓ (3)

5.2

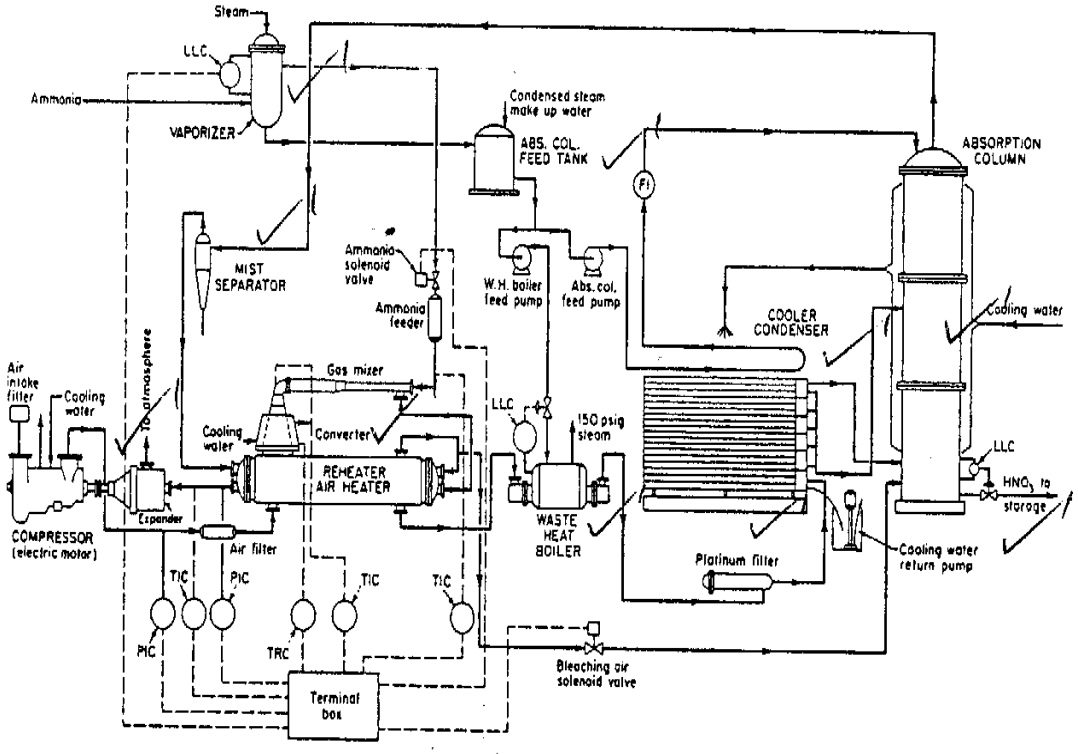

1 mark each for any TWELVE correct labels (12)
[15]

TOTAL: 100

Copyright reserved