higher education & training

Department:
Higher Education and Training
REPUBLIC OF SOUTH AFRICA

MARKING GUIDELINE

NATIONAL CERTIFICATE

CHEMICAL PLANT OPERATION N5

1 AUGUST 2018

This marking guideline consists of 5 pages.

Copyright reserved

QUESTION 1

1.1 True
1.2 True
1.3 False
1.4 True
1.5 False

(5 × 1) **[5]**

QUESTION 2

2.1

Substance	Mass/mol	Mol	Mol%
Na_2SO_4	$\frac{18}{2(23)+32+4(16)}$	0,127✓	$\frac{0,127}{1.645}$ × 100 = 7,7%✓
NaOH	$\frac{36,5}{23+16+1}$	0,913✓	$\frac{0,913}{1,645}$ × 100 = 55,5%✓
Na_2CO_3	$\frac{22,5}{2(23)+12+3(16)}$	0,212✓	$\frac{0,212}{1,645}$ × 100 = 12,9%✓
NaCl	$\frac{23}{23+35,5}$	0,93✓	$\frac{0,393}{1,645}$ × 100 = 23,9%✓
Total		1,645✓✓	

(10)

2.2.1 The incoming dust-laden air receives a rotating motion on entrance to the cylinder.✓ The vortex so formed develops centrifugal force, which act to throw the particles radially towards the wall.✓ The path of the air in a cyclone follows a downward vortex or spiral adjacent to the wall and reaching to the bottom of the cone.✓ Particles then leave the cyclone at the bottom.✓ The air stream then moves upward in a tighter spiral, concentric with the first and leaves through the outlet pipe still whirling.✓ (5)

2.2.2 Two counteracting ribbons are mounted on the same shaft,✓ one moving slowly in one direction and the other quickly in the other direction,✓ mixing results from the turbulence induced by the agitators.✓ Solids are fed into one end of the trough and discharged from the other.✓ Some ribbon blenders operate batch wise while others mix continuously.✓ They are effective mixers for thin pastes and powders that do not flow readily. (5)

Copyright reserved

2.3

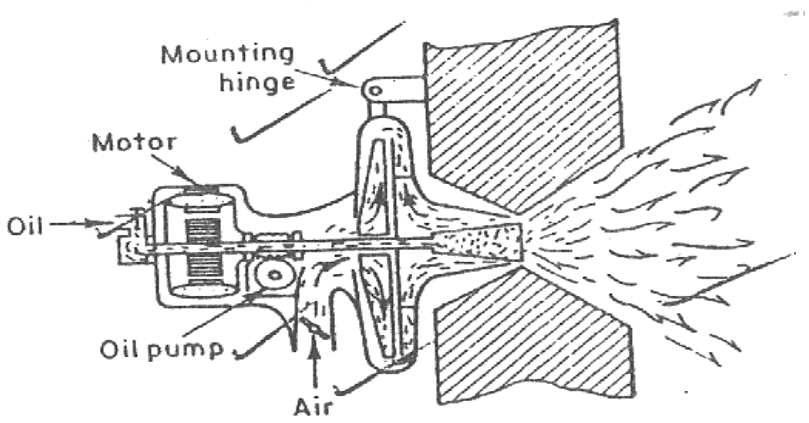

(1 mark for each correct labelling) (5)
[25]

QUESTION 3

3.1 C
3.2 H
3.3 A
3.4 B
3.5 F

(5 × 1) **[5]**

QUESTION 4

4.1 4.1.1

- Steam flows from the centre outwards or from the outside to the centre.
- Pressure drops in the nozzles.
- Velocity increases due to the pressure drop.
- Velocity decreases as kinetic energy is given to moving blades.

4.1.2

- The steam flow is parallel to the turbine axis.
- Total pressure drop takes place in one set of nozzles only.
- The steam enters the row of moving blades at a high velocity, which is directed at the moving blades.
- The steam transfers most of its velocity to the moving wheel.

(2 × 4) (8)

4.2 4.2.1 Weight fraction: $\frac{20}{(100+20)}$ ✓ ✓

= 0,167✓

∴% weight = 0.167 x 100

= 16,7%✓

4.2.2 Moles of water = $\frac{100}{2(1)+16}$ = 5,56✓

Moles of salt = $\frac{20}{23+35,5}$ = 0,34✓

∴Mole fraction of salt = $\frac{0.34}{(5,56+0,34)}$✓

= 0,058✓ (2 × 4) (8)

4.3 A short, wide bowl turns on a vertical axis. The bowl has a flat bottom and conical top. Feed enters from above through a stationary pipe set into the neck of the bowl.✓ Two liquid layers are formed as in a tubular centrifuge, which flow over adjustable dams into separate discharge spouts.✓ Inside the bowl and rotating with it are closely spaced disks which are actually cones of sheet metal set one above the other.✓ There are matching holes in the disks about halfway between the axis and the wall of the bowl from channels through which the liquid passes.✓ In operation feed liquid enters the bowl at the bottom, flows into the channels, and upward passes the disk.✓ Heavier liquid is thrown outward, displacing lighter liquid toward the centre of the bowl.✓ In its travel the heavy liquid very soon strikes the underside of a disk and flows beneath in to the periphery of the bowl without encountering any more light liquid.✓ Light liquid similarly flows inward and upward over the upper surfaces of the disks.✓ (8)

[24]

QUESTION 5

5.1
- It consists of a large construction.
- Costly heating and cooling apparatus are needed.
- Air under pressure must be pumped into the system to make up for leakages. (3)

5.2

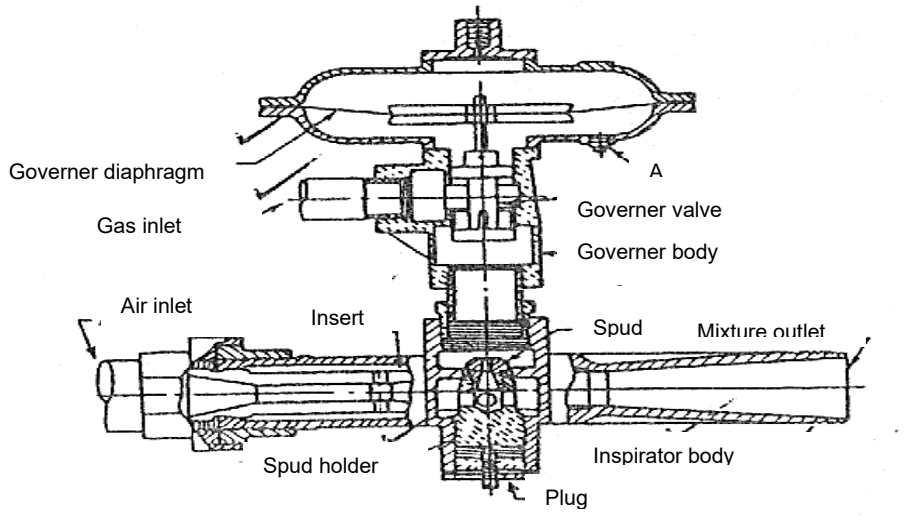

(1mark for each correct labelling) (11)

5.3 In this application heat from the flame continually converts liquid fuel✓ into vapour in the combustion air,✓ thus sustaining the flame.✓ This principle is used in blowtorches, kerosene lamps, cigarette lighters, et cetera✓ (4)

5.4
- Distillation of salt rock with sulphuric acid
- By lightning
- Burning of ammonia in air (3)

[21]

QUESTION 6

6.1
- A kneader handles suspensions, pastes and light plastic masses.
- A dispenser is heavier in construction and draws more power than a kneader, it makes additives and colour agents into stiff materials.
- A masticator draws even more power. It can disintegrate scrap rubber and compound the toughest plastic masses. (3 × 2) (6)

6.2
- Sulphuric acid and salt are roasted in a furnace to form hydrogen chloride and sodium sulphate.
- Passing it through coolers cooled externally by water, the hot hydrogen chloride is contaminated with droplets of sulphuric acid and particles of salt cake.
- The cooled gas is then passed through a coke tower to remove suspended foreign materials.
- Purified hydrogen chloride from the top of the coke tower is absorbed in water in a tantalum of carbide absorber.
- Finished hydrochloric acid is withdrawn from the bottom of the absorber. (5)

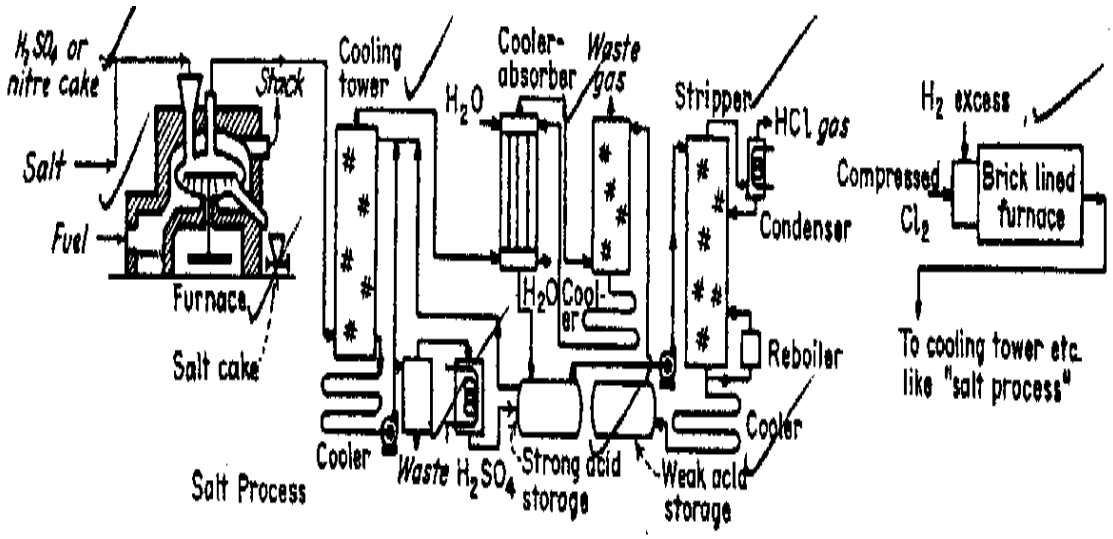

(9)

[20]

TOTAL: 100

Copyright reserved