higher education & training

Department:
Higher Education and Training
REPUBLIC OF SOUTH AFRICA

MARKING GUIDELINE

NATIONAL CERTIFICATE

CHEMICAL PLANT OPERATION N5

15 April 2021

This marking guideline consists of 5 pages.

Copyright reserved

QUESTION 1

1.1 Pressure
1.2 Parallel
1.3 Blades
1.4 Air
1.5 Temperature

(5 × 1) **[5]**

QUESTION 2

2.1
- Identify the type of problem.
- Draw a flow sheet.
- Select basis for a calculation.
- Construct an input-output table.
- Formulate the balances needed for the solution. (5)

2.2 2.2.1 $4NH_3 + 3O_2 \rightarrow 2N_2$✓ $+ 6H_2O$✓

2.2.2 $NaNO_3 + H_2SO_4 \rightarrow NaHSO_4$✓ $+ HNO_3$✓

(2 × 2) (4)

2.3
- Change-can:✓ Blend viscous liquids or light pastes as in food processing or paint manufacturing.✓
- Two-arm kneader:✓ Suspensions, pastes and light plastic masses.✓
- Banbury:✓ Heavy, stiff or gummy materials.✓
- Muller:✓ Batches of heavy solids and pastes, coating of particles.✓
- Ribbon:✓ Dry powders and thin pastes.✓
- Tumbler:✓Dense solids in liquids and heavy dry powders.✓
- Internal screw:✓ Free flowing grains and light solids. ✓
- Impact wheels:✓ Fine, light powders such as insecticides. ✓ (Any 6 × 2) (12)

2.4
- Advantages: The working agent remains free from pollution by the products of combustion and hence the interior of the plant remains clean.
- Disadvantages: Large, costly heating and cooling surfaces are needed, and air must be pumped into the system to make up for leakage. (2 × 2) (4)

[25]

QUESTION 3

3.1 3.1.1
- In a reaction turbine, only part of the pressure drop occurs in the nozzle.✓
- The remainder occurs during the passage of the steam through the blades.✓
- The blade passages are nozzles shaped so that the acceleration of the steam occurs partly in the blade.✓
- The force of reaction is added to the force resulting from redirection of the steam to make the total propulsive force on the blade.✓ (4)

Copyright reserved

3.1.2
- In an impulse turbine, the entire available pressure drop from supply to exhaust occurs across the nozzle.✓
- The steam carries out its full expansion in the nozzle and emerges with high velocity.✓
- The nozzle directed the steam onto the blades,✓ which are so shaped that the direction of flow of steam is changed and thereby a force is exerted on the blades.✓ (4)

3.1.3
- The shape of the nozzle must be such that the conversion from internal energy to kinetic energy is carried out with greatest efficiency.
- Nozzles are either converging or converging-diverging.
- The minimum section of a nozzle is called a throat.
- The corresponding pressure at the throat is called critical pressure.
- If the discharge pressure is greater than the critical pressure, converging nozzles are required.
- If the discharge pressure is less than the critical pressure, converging-diverging nozzles are required. (9)

3.2
- Particle size and cyclone diameter.✓
- Efficiency decrease with increased temperature.✓
- Efficiency increases with particle density.✓
- Separation is more efficient if the particles are larger, because small particles can agglomerate.✓
- Larger diameter cyclones tend to be less efficient because of a loss in centrifugal force, and this effect is offset by the increased surface area.✓ (5)

[22]

QUESTION 4

4.1 Immiscible liquids are separated industrially in centrifugal decanters.✓ Their operation is similar to that of gravity decanters,✓ except that the separating is much larger than that of gravity✓ and it acts in the direction away from the axis of rotation instead of downwards towards the earth's surface.✓ The main types of centrifugal decanters are tubular centrifuges and disk centrifuges.✓ (5)

4.2 4.2.1 Input = Output ✓

Input = mass of A entering + mass of B entering ✓

= 250 kg✓ + 150 kg✓

= 400 kg✓

∴ Output = 400 kg ✓ (6)

4.2.2 Input of C_6's = amount of C_6's in A + amount of C_6's in B✓

$$= 250X\frac{65}{100}+150X\frac{55}{100}\checkmark\checkmark$$

$$= 162.5+82.5\checkmark$$
$$= 245kg\checkmark$$

Input of C_8's = amount of C_8's in A + amount of C_8's in B ✓

$$= 250X\frac{35}{100}+150X\frac{45}{100}\checkmark\checkmark$$

$$= 87.5+67.5\checkmark$$
$$= 155kg\checkmark$$

%C_6's and %C_8's

%C_6's = $\frac{245}{400}X100 = 61.25\%\checkmark$

%C_8's = $\frac{155}{400}X100 = 38.75\%\checkmark$

(12)
[23]

QUESTION 5

5.1 True
5.2 True
5.3 False
5.4 True
5.5 False

(5 × 1) **[5]**

QUESTION 6

6.1

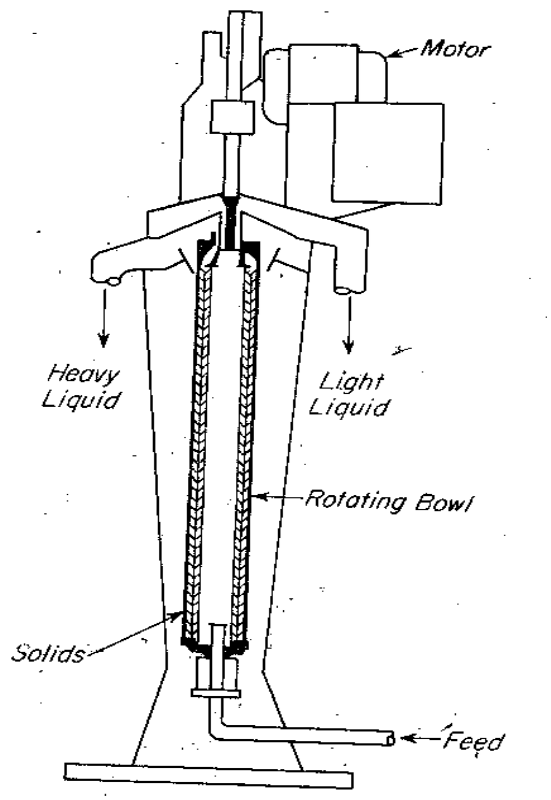

(2 × 1 for the correct diagram)
(6 × 1 for the correct labelling)

Operation:

The bowl is tall and narrow, turns in a stationary casing at about 15 000 r/min.✓ Feed enters from a stationary nozzle inserted through an opening in the bottom of the bowl.✓ It separates into two concentric layers of liquid inside the bowl. The inner or lighter layer spills over a weir at the top of the bowl, which is thrown outward into a spout.✓ Heavy liquid flows over another weir into a separate discharge spout.✓ (12)

6.2

- SO_2 is produced by the burning of sulphur (S).
- The gases from the combustion pass through the next exchanger, which heats the water for the boilers.
- The cooled gases are pumped into the absorbers through an acid-proof pump.
- The gas is then passed through a drying tower in which sulphuric acid is used.
- Oxidation of SO_2 to SO_3.
- Conversion of SO_3 to H_2SO_4.
- Absorption of SO_3.
- Cooling of acid. (8)

[20]

TOTAL: 100

Copyright reserved