higher education & training

Department:
Higher Education and Training
REPUBLIC OF SOUTH AFRICA

MARKING GUIDELINE

NATIONAL CERTIFICATE

CHEMICAL PLANT OPERATION N5

6 APRIL 2018

This marking guideline consists of 6 pages.

Copyright reserved

QUESTION 1

1.1 Difference in energy between the products of the reaction and the reactants (2)

1.2 Temperature at which water✓ will change to steam✓ and the saturation temperature will depend upon the pressure on the surface of the water✓ (3)

1.3 Steam that is heated to a temperature higher✓ than the saturation temperature✓ (2)

1.4 Heat of reaction involved in the formation of a compound✓ from its constituent element✓ when all chemical species are in a stable state at 25 °C and 1 atm✓ (3)

1.5 Material which is inert or unreactive✓ which passes through the system from a single input system✓ to a single output stream and of course remains completely unchanged during this process✓ (3)

1.6 Total heat capacity of a compound approximately equal✓ to the sum of the heat capacities of the constituent element✓ (2)
[15]

QUESTION 2

2.1 Kinetic energy
2.2 Calorie
2.3 Centrifuge
2.4 Cut-diameter
2.5 Reaction turbine

(5 × 1) **[5]**

Copyright reserved

QUESTION 3

3.1

Input	Atoms reacting	Output comp	H	C	O
CH_4	Methane	4,6	(4,6 × 4) = 18,4	(4,6 × 1) = 4,6	–
C_2H_6	Ethane	2,3	(2,3 × 6) = 13,8	(2,3 × 2) = 4,6	–
CO		18,6	-	(18.6 × 1) = 18,6	(18,6 × 1) = 18,6
CO_2		4,6	-	(4,6 × 1) = 4,6	(4,6 × 2) = 9,2
H_2		69,7	(69,7 × 2) = 139,4	–	–
H_2O	Steam	–	–	–	–
Total			171,6✓	32,4✓	27,8✓

H-atom balance: 4M + 6E + 2S = 171,6 ……(1)✓
C-atom balance: M + 2E = 32,4 ……(2)✓
O-atom balance: S = 27,8 ……(3)✓

Substitute (3) into (1) and make M subject of the formula:

4M + 6E + 2(27,8) = 171,6
4M + 6E = 116
∴ M = 29 – 1,5E ……..(4)✓

Substitute (4) into (2)

29 – 1,5E + 2E = 32,4
∴ E = 6,8✓

Substitute E into (4)

M = 29 – 1,5(6,8)
M = 18,8✓

∴M = 18,8 E = 6,8 and S = 27,8

Molar ratio = M:E
$= \frac{18,8}{6,8}$✓
= 2,76 : 1✓
(Accept other methods) (11)

3.2

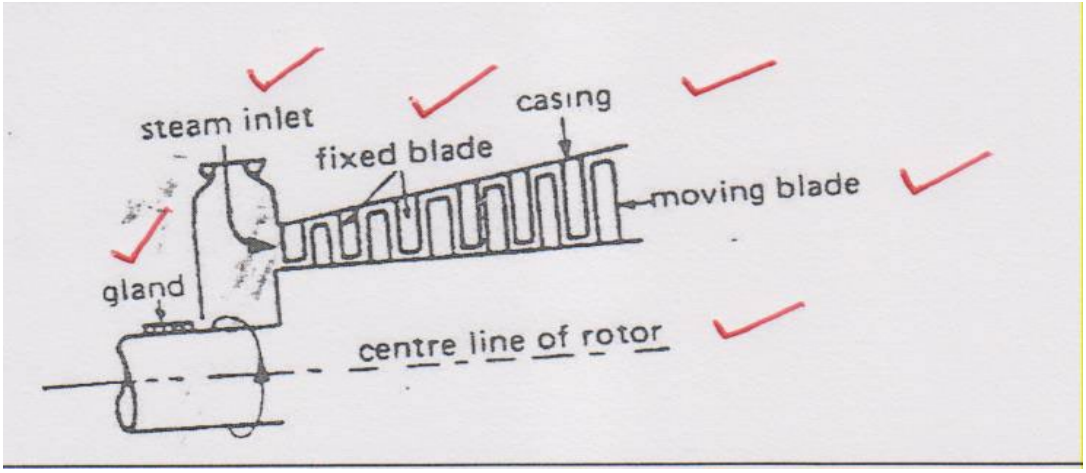

(6)

3.3
- Time
- Temperature
- Turbulence

(3)
[20]

QUESTION 4

4.1

The Van't Hoff box connect the initial state (reactants) with the final state (products).

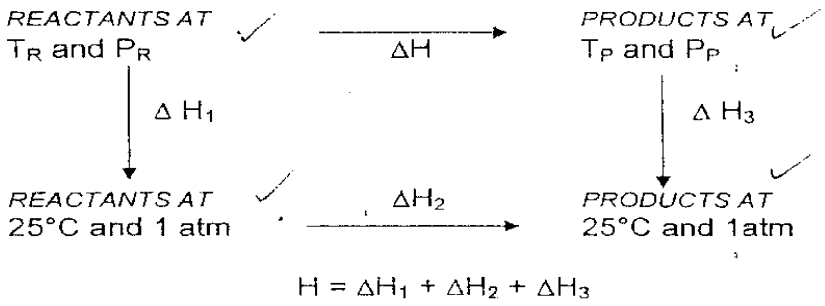

$H = \Delta H_1 + \Delta H_2 + \Delta H_3$

(ONE mark for correct diagram) (5)

4.2 The incoming dust laden air receives a rotating motion on entrance to the cylinder.✓ The vortex so formed develops centrifugal force, which act to throw the particles radially towards the wall.✓ The path of the air in a cyclone follows a downward vortex or spiral adjacent to the wall and reaching to the bottom of the cone.✓ Particles then leave the cyclone at the bottom.✓ The air stream then moves upward in a tighter spiral, concentric with the first and leaves through the outlet pipe still whirling.✓ (5)

4.3
- Identify the type of problem.
- Draw a flow sheet.
- Select a basis for calculation.
- Construct an input-output table.
- Formulate the balances needed for the solution.

(5)
[15]

QUESTION 5

5.1

	Input		Output
	Light oil	**Heavy oil**	**Blend**
C_8	70% = 0,70	25% = 0,25	35 mol%
C_{12}	30% = 0,30	75% = 0,75	65 mol%

C8: 0,7L + 0,25H = 35 .....(1)✓
C12: 0,3L + 0,75H = 65.....(2)✓

From (1) make L subject of the formula:

0,7L = 35 – 0.25H✓
∴L = 35/0,7 – 0,25 H/0,7✓
L = 50 – 0,357 H ……..(3)✓

Substitute (3) in (2)

0,3(50-0,357H) + 0,75H = 65✓
15 – 0,107H + 0,75H = 65
∴0,643H = 50✓
∴ H = 77,76 kg heavy oil✓

Substitute H in (3)

L = 50 – 0,357(77,76)✓
= 50 – 27,76
= 22,24 kg light oil✓
(Accept other methods) (10)

5.2

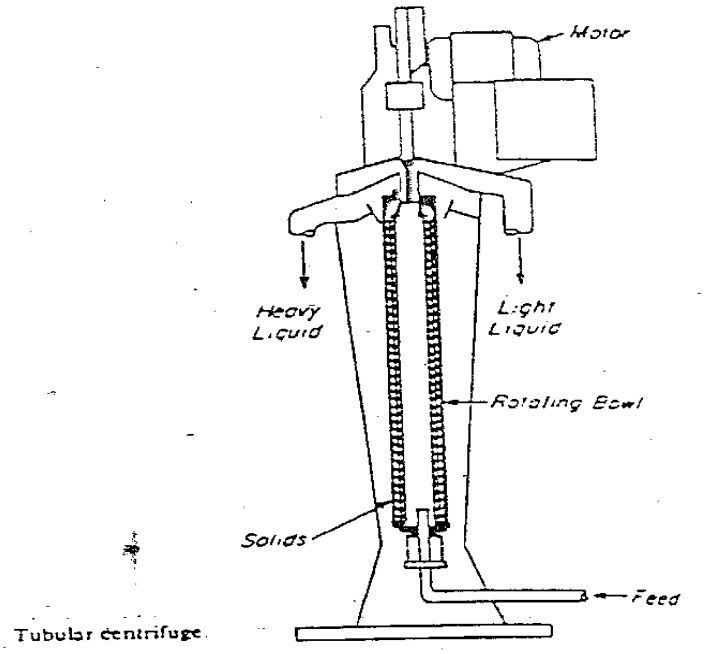

(1 mark for each correct labelling and one mark for correct diagram) (7)

5.3 The heat of reaction equals the sum of the heat of formation of the products✓ minus✓ the sum of the heat of formation of the reactants.✓ (3)
[20]

QUESTION 6

6.1
- Manufacture of sulphates
- Manufacture of fertilisers
- Manufacture of leather
- Manufacture of tin plate
- Manufacture of nitrates
- Refining of petroleum
- Manufacture of explosives
- Dyeing of fabrics
- Mineral processing
- Making detergents
- As a catalyst
- Acid in a car battery (Any 5 × 1) (5)

6.2 $S_{(s)}$ ✓ + $O_{2(g)}$ ✓ $\longrightarrow$ $SO_{2(g)}$ ✓ (3)

6.3 6.3.1 $Mg + 2HNO_3 \longrightarrow Mg(NO_3)_2$✓ + H_2✓

6.3.2 $Mn + 2HNO_3 \longrightarrow Mn(NO_3)_2$ ✓ + H_2✓

6.3.3 $Zn + 2HNO_3 \longrightarrow Zn(NO_3)_2$ ✓ + H_2✓

(3 × 2) (6)

6.4
- Oxidizing acid in the plating of gold and silver
- To produce ammonium nitrate
- Photo-engraving
- Produce nitrates and nitro-derivatives
- Make explosives
- Manufacture of polyamides
- Manufacture of polyurethanes
- To remove calcium and magnesium (Any 6 × 1) (6)

6.5
- Equilibrium is an inverse function of temperature✓ and a direct function of the O_2/SO_2 ration.✓
- Rate of reaction is a direct function of temperature.✓
- Composition and ratio of the amount of catalysts to the amount of SO_3 formed✓
- Removal of SO_3 causes more SO_2 to be converted✓ (5)

[25]

TOTAL: 100

Copyright reserved