higher education & training

Department:
Higher Education and Training
REPUBLIC OF SOUTH AFRICA

MARKING GUIDELINE

NATIONAL CERTIFICATE

BUILDING AND STRUCTURAL SURVEYING N6

4 APRIL 2018

This marking guideline consists of 9 pages.

Copyright reserved

MARKING INSTRUCTIONS

1. Mark neatly with a red pen.

2. Do NOT draw lines through wrong answers.

3. Write the marks for each answer in the right margin and the total for an entire question in a circle in the left margin.

4. Use your own discretion should there be more than one possible correct answer/formula/sketch that does NOT appear in the marking guideline. Evaluate it and allocate marks accordingly.

Copyright reserved

QUESTION 1

NAME	JOIN	ΔY	ΔX	NAME	Y	X
A				A	+ 1 932,96	+1 332,85
313:41:10		-140,18√	+133,90√			
193,85 m		-0,11√	+0,09√			
B				B	+1 792,67√	+1 466,84√
283:25:31		-251,44√	+60,04√			
258,51 m		-0,15√	+0,12√			
C				C	+1 541,08√	+1 527,00√
204:16:31		-73,83√	-163,70√			
179,58 m		-0,11√	+0,08√			
D				D	+1 467,14√	+1 363,38√
245:08:21		-279,64√	-129,57√			
308,20 m		-0,18√	+0,14√			
E				E	+1 187,32	+1 233,95
940,14√		-745,09√	-99,33√		-745,64√	-98,90√
		-745,64√	-98,90√			
		-0,55√	+0,43√			

$\frac{-0,55}{940,14}$ X leg √ $\frac{+0,43}{940,14}$ X leg√

1 × 7 =7
0,5 × 26 = 13
20 **[20]**

QUESTION 2

Station	Circle left	Circle right	Mean angle	Correction	Adjusted angle
B1	300:42:16	120:41:32			
B2	71:43:04	25:42:24			
	131:00:48	131:00:52	131:00:50	-00:00:02	131:00:48√
B2	71:43:04	251:42:24			
B3	169:39:22	349:38:52			
	97:56:18	97:56:28	97:56:23	-00:00:02	97:56:21√
B3	169:39:22	349:38:52			
B1	300:42:04	120:41:56			
	131:02:42	131:03:04	131:02:53	-00:00:02	131:02:51√
			360:00:06	-00:00:06	360:00:00√

JOIN T1 – B2

Dy_{T1-B2} = -2 991,62 – (-2 562,56)
= -429,09√

Dy_{T1-B1} = +3 012,34 – 3 862,12
= -849,78√

Direction T1 – B2 = $\frac{-429,06}{-849,78}$ 3rd quadrant
Tanθ = 0,50490715√

Direction T1 – B2 206:47:22
Angle B2; T1; B2 97:56:21√
T1 – B3304:43:43
Angle B3; T1; B1 131:02:51√
T1 – B1 75:46:34
Angle B1; T1; B2 131:00:48
T1 – B2 206:47:22√ **[10]**

QUESTION 3

Station		Distance		HI or middle hair MH	Angles		HI – MH + -	Height component + -	Height difference + -	Elevation of point	Remarks
From	To	Stadia	Hor		Hor	Vert					
R				1,46						713,24	
	R1	1,90 0,58	129,05√	1,24√	136:49:00	98:36:00	+0,22√	-19,30√	-19,30√	693,94√	
	R2	4,02 2,60	139,01√	3,31√	173:21:00	81:39:00	-1,85√	+20,40√	+18,55√	731,79√	
	R3	1,84 0,60	121,69√	1,22√	246:32:00	82:09:00	+0,24√	+16,78√	+17,02√	730,26√	
	R4	3,64 1,26	228,38√	2,45√	299:52:00	101:36:00	-0,99√	-46,88√	-47,87√	665,37√	

1 × 16 = 16
0,5 × 8 = 04
= 20 **[20]**

QUESTION 4

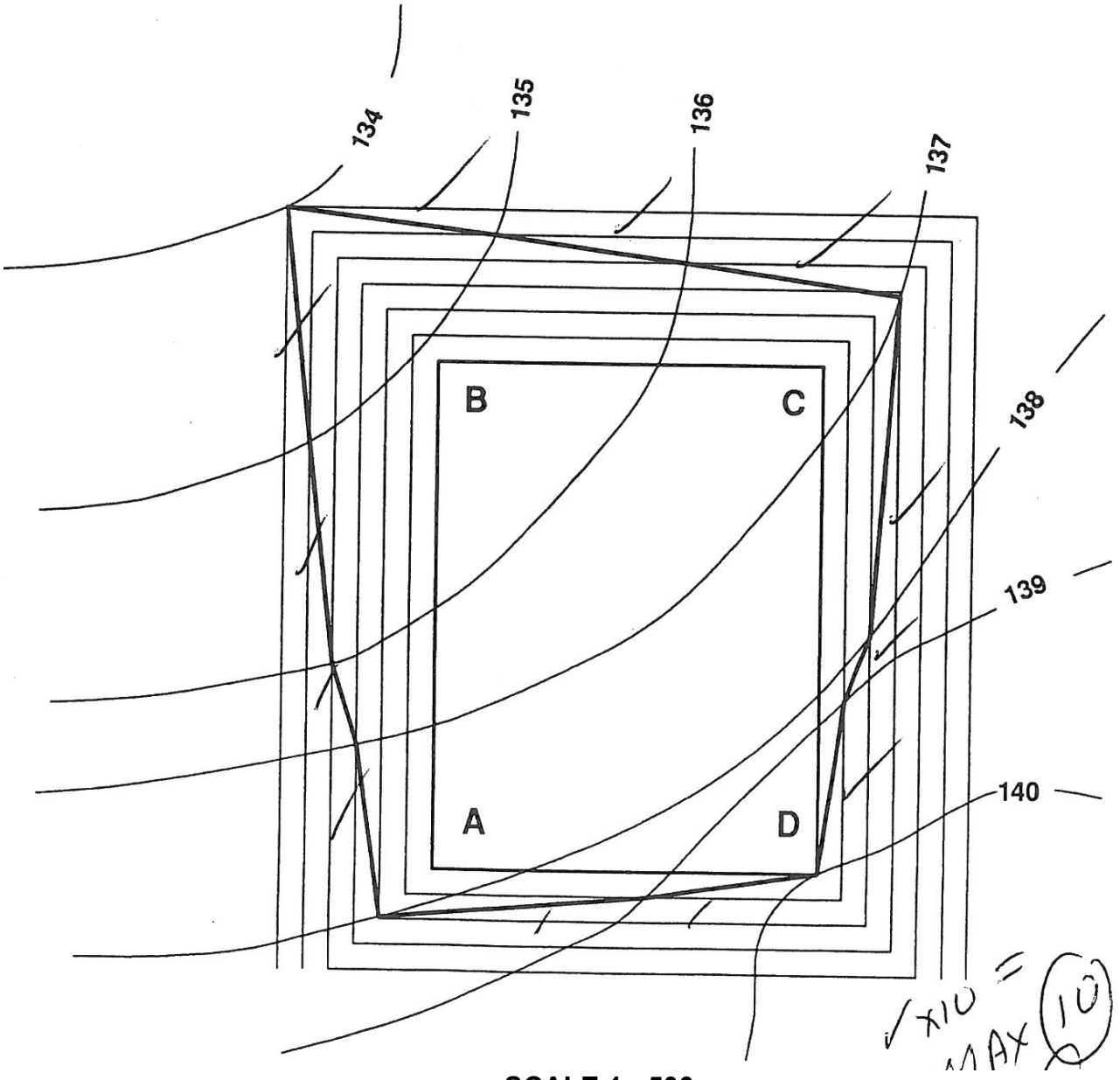

✓ x10 = MAX (10)

SCALE 1 : 500 **[10]**

QUESTION 5

Distance S1 – S2 = 3 122,24 – 2 932,82
= 189,42 m√

Area S1

$W_1 = \frac{g\,(a+hs)}{g-s}$

$= \frac{6\,(4{,}5+(2{,}68\times 2{,}5))}{6-2{,}5}$√

= 19, 2√

$W_2 = \frac{g\,(a+hs)}{g-s}$

$= \frac{67{,}2}{8{,}5}$√

= 7,9√

Area $= \frac{(w1\times w2)-a2}{s}$

$= \frac{(19{,}2\times 7{,}9)-(4{,}5)2}{2{,}5}$√

= 52,57 m^2√

Area S1

$W_1 = \frac{g\,(a+hs)}{g-s}$

$= \frac{8\,(4{,}5+(1{,}76\times 2{,}5))}{8-2{,}5}$√

= 12,95√

$W_2 = \frac{g\,(a+hs)}{g-s}$

$= \frac{71{,}2}{10{,}5}$√

= 6,78√

Area $= \frac{(W_1 \times W_2) - a^2}{S}$

$= \frac{(12{,}95 \times 6,\,78) - (4{,}5)^2}{2,\,5}$√

= 27,02 m^2√

Volume $= \frac{A_1 + A_2}{2} \times$ distance

$= \frac{(52{,}57 + 27{,}02)}{2} \times 108{,}42$√

= 7 537,96 m^3√

[15]

QUESTION 6

$$T = R \tan \frac{\Delta}{2} \surd$$

$$T = 210 \times \tan 21:00:00 \surd$$

T = 80,61 m√

BC = 4 348,21 – 80,61√
= 4 267,6 m √

La = $\frac{\pi \Delta R}{180}$
= $\frac{\pi \times 42:00:00 \times 210}{180}$√
= 153,93 m√
EC = BC + La
= 4 267,6 + 153,93√
EC = 4 421,53 m√

(a = 12,4) = $\frac{1\,718,9 \times 12,4}{210 \times 60}$ = 01:41:29,82√

(a = 20,00) = $\frac{1\,718,9 \times 20,00}{210 \times 60}$ = 02:43:42√

(a = 1,53) = $\frac{1\,718,9 \times 1,53}{210 \times 60}$ = 00:12:31√

CHAINAGE	CHORD	ϑ	α
BC 4267,60		00:00:00	360:00:00√
4280,00	12,40	01:41:30	358:18:30√
4300,00	20,00	02:43:42	355:34:48√
4320,00	20,00	02:43:42	352:51:06√
4340,00	20,00	02:43:42	350:07:24√
4360,00	20,00	02:43:42	347:23:42√
4380,00	20,00	02:43:42	344:40:00√
4400,00	20,00	02:43:42	341:56:18√
4420,00	20,00	02:43:42	339:12:36√
EC 4421,53	1,53	00:12:31	339:00:05√
153,93√	153,93√	20:59:55√	20:59:55√

0,5 × 12= 6
1 × 14 =14
20 **[20]**

QUESTION 7

7.1 The angle of direction is the angle measured in a clockwise direction between zero direction (south) and the line in question. (3)

7.2 A closed traverse is when works from a known point to another known point or to the same starting point (2)
[5]

TOTAL: 100

Copyright reserved