higher education & training

Department:
Higher Education and Training
REPUBLIC OF SOUTH AFRICA

NATIONAL CERTIFICATE

BUILDING AND STRUCTURAL SURVEYING N4

(8060034)

20 November 2020 (X-paper)
09:00–12:00

This question paper consists of 6 pages and 1 formula sheet.

175Q1E2020

Copyright reserved

DEPARTMENT OF HIGHER EDUCATION AND TRAINING
REPUBLIC OF SOUTH AFRICA

NATIONAL CERTIFICATE
BUILDING AND STRUCTURAL SURVEYING N4
TIME: 3 HOURS
MARKS: 100

INSTRUCTIONS AND INFORMATION

1. Answer all the questions.
2. Read all the questions carefully.
3. Number the answers according to the numbering system used in this question paper.
4. Write neatly and legibly.

Copyright reserved

QUESTION 1

Various options are given as possible answers to the following questions. Choose the answer and write only the letter (A–D) next to the question number (1.1–1.10) in the ANSWER BOOK.

1.1 A plumb bob is mainly used to set out a true vertical to a point …

A on the ground.
B on a peg.
C on the ground and on a peg.
D that is none of the above.

1.2 A trig beacon is the highest point of …

A known height above sea level.
B known co-ordinates.
C a known point below sea level.
D both A and B.

1.3 A distometer is used with a …

A dumpy level.
B theodolite.
C clinometer.
D traveller.

1.4 The main purpose of using a traveller is to have …

A a uniform excavation depth.
B a slightly slanting excavation.
C both A and B.
D all three.

1.5 A traveller is usually made of …

A wood.
B aluminium.
C structural steel.
D plastic.

1.6 Step chaining is a method to determine the horizontal distance of a …

A sloping site or terrain.
B sloping structure.
C dam wall.
D both A and C.

Copyright reserved

1.7 Systematic errors recur in the same instrument and are ...

A cumulative.
B positive or negative.
C both A and B.
D negative.

1.8 Mistakes are mainly ...

A wrong.
B miscounting.
C wrong booking.
D all three.

1.9 Booking is the entering of all survey information and measurements in …

A an information book.
B a field book.
C a log book.
D both A and C.

1.10 When setting up the plane table it is important to remember …

A to have all equipment on hand.
B the location of contours.
C that the table must be level when erected.
D both A and C.

(10 × 1) **[10]**

QUESTION 2

2.1 Explain *alidade* regarding plane table equipment. (5)

2.2 Briefly describe *systematic errors*. (4)

2.3 Explain each of the following methods of setting up a plane table:

2.3.1 Centring (4)

2.3.2 Levelling (4)

2.3.3 Orienting (3)

[20]

Copyright reserved

QUESTION 3

3.1 A Distance of 82,400 m between two pegs was attained with a 100 m steel tape that was later found to be 0,03% short.

Calculate the correct length. (4)

3.2 A measured distance is 136,40 m at 20 ˚C. The standard temperature of the tape is 25 ˚C and the coefficient of linear expansion of the steel tape is 0,000113 ˚C.

Calculate the correct distance. (5)

3.3 Calculate the distance between two points on a map if the representative fraction is 1:1200 and the actual ground distance is 450 m. (4)

[13]

QUESTION 4

4.1 What is the difference between *tilting level* and *dumpy level* with regard to a telescope? (3)

4.2 Identify the indicated parts of the automatic level below by writing only the answer next to the question number (4.2.1–4.2.6) in the ANSWER BOOK. (6)

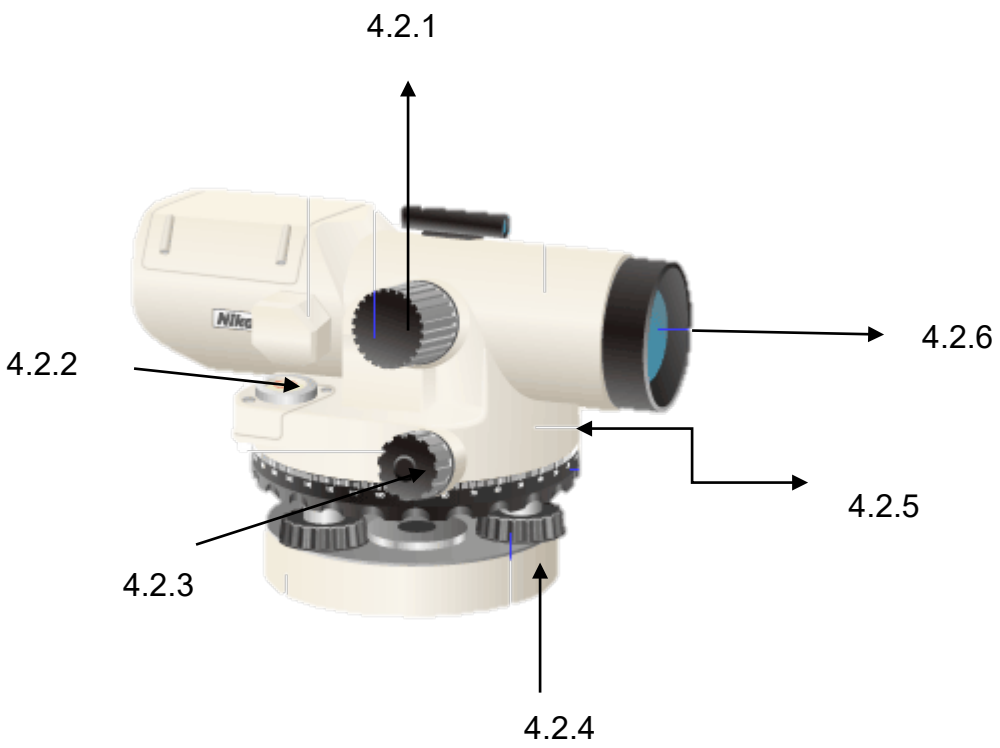

4.3 Name FOUR parts of a tilting level. (4)

[13]

QUESTION 5

5.1 Steel tapes are brittle, elastic and prone to rust.

State SIX measures to observe when handling steel tapes. (12)

5.2 Accuracy of surveying depends upon accuracy of orientation.

State SIX measures which must be observed at all times. (12)
[24]

QUESTION 6

6.1 A plot with the shape of a trapezium has the following measurements:

Long side: 52 m
Short side: 24 m
Perpendicular distance between two sides:11 m

Calculate the area of the plot in hectares. (5)

6.2 Calculate the area of a circle sector with a radius of 15 m. The angle subtended by the arc is 69°. (6)

6.3 Calculate the area of a regular decagon with sides of 32 m long. (4)
[15]

QUESTION 7

7.1 Name FOUR main methods of surveying using a plane table. (4)

7.2 What does *orient* mean? (1)
[5]

TOTAL: 100

Copyright reserved

BUILDING AND STRUCTURAL SURVEYING N4

FORMULA SHEET

Any other applicable formula may also be used.

1. $A = {}^{1}/_{2}\, bx \perp h$

2. $A = \sqrt{s(s-a)(s-b)(s-c)}$, $\frac{a+b=c}{2}$

3. $A = \frac{(a+b)x\,h}{2}$

4. A = a x h

5. $A = \frac{d}{3}[(y_1 + y_n) + 2(y_3 + y_5 + \ldots + (y_n - 2) + 4(y_2 + y_4 + \ldots + y_n - 1)]$

6. $A = d\,[(\frac{y_2 + y_n}{2} + y_2 + y_3 + \ldots + y_{n-1}]$

7. $C = L \text{ x } e \text{ x}(t_{m-} t_{s)}$

8. $C = \frac{W^2 L^3}{24T^2}$

9. $C = L\,(1 - \text{Cos}\Theta)$

10. $C = H\,(\text{sec} - 1)$11. $C = \frac{LH}{R}$

11. $A = \frac{1}{2} abSinC$

Copyright reserved