higher education & training

Department:
Higher Education and Training
REPUBLIC OF SOUTH AFRICA

MARKING GUIDELINE

NATIONAL CERTIFICATE

NOVEMBER EXAMINATION

BUILDING AND STRUCTURAL SURVEYING N4

22 NOVEMBER 2016

This marking guideline consists of 6 pages.

Copyright reserved

QUESTION 1

1.1 The first reading after setting up the instrument is called the back sight.

1.2 The term levelling is used to cover all operations for fixing heights or relative differences in level.

1.3 The members of a survey team doing work on site.

1.4 Is the location of the main natural and artificial features of the area.

1.5 A vertical plane is one which contains the plumb line.

(5 × 2) **[10]**

QUESTION 2

2.1
- Honesty is of prime importance.
- Sound knowledge of the theory and practice of surveying is essential.
- Neatness: i.e. record keeping of field observations etc.
- Initiative and resourcefulness should be applied to each problem.
- Only accept information given or results obtained as being trustworthy when verified.
- Must be reliable.
- Judgement must be sound.
- Must be able to think clearly without confusion.
- Reason logically without prejudice.
- Must be thorough and be content with his/her work only when it has been finished in a workmanlike manner. (Any 5 × 1) (5)

2.2
- Perpendicular offset
- Length and direction
- Resection
- Forward intersection
- Sideways intersection
- Ties (Any 5 × 1) (5)

[10]

QUESTION 3

3.1

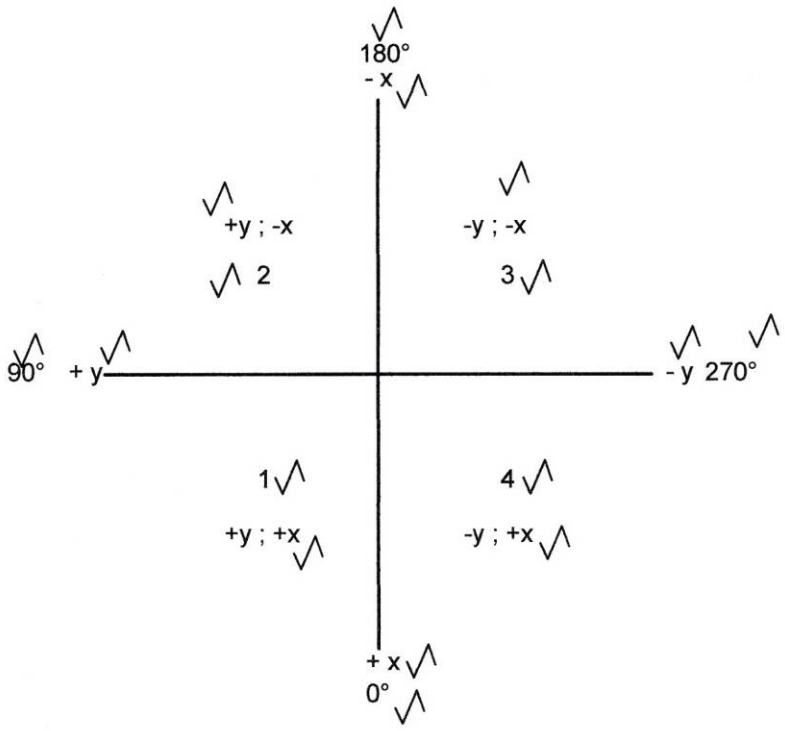

√ x 16 = 8 (8)

3.2

$A = \frac{1}{2}\, a\, b \sin C$ √

$A = \frac{1}{2}\, 5\, x\, 7 \sin 35°$ √

$A = 10,04\, m^2$ √ (3)

3.3

$Chord = 2\, x\, R\, x\, \frac{1}{2} \sin \alpha$ √

$Chord = 2\, x\, 8\, x\, \frac{1}{2} \sin 38°$ √

$Chord = 5,21\, m$ √

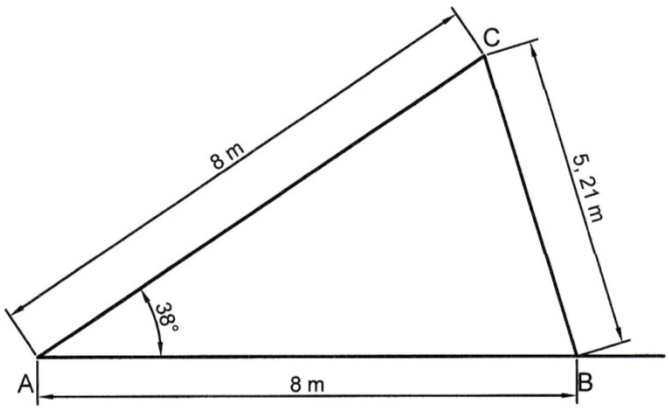

√√

- On the base line mark off B, 8 m from A.
- One assistant keeps the zero mark of one tape at A.
- The other assistant keeps the zero mark of another tape at B.
- The third person keeps the first tape on the 8 m mark and the second tape on the chord length of 5,21 m and moves outwards until both tapes are fully extended and the two marks will coincide at C.
- CAB is the required 38:00:00 angle. (5 + 3 for explanation) (8)

[19]

QUESTION 4

4.1
- Set up the table at A, the first station and mark 'a'.
- With the alidade at 'a', point toward B and draw a line.
- Measure the ground distance A to B and scale off to give 'a' 'b'.
- Set up the table with 'b' over point B.
- Orient the table from B to A.
- With the alidade at 'b', point toward C and draw a line.
- Measure the ground distance B to C and scale off to give 'b' 'c'.
- Set up the table with 'c' over point C.
- Orient the table from C to B.
- With the alidade at 'c', point toward D and draw a line.
- Measure the ground distance C to D and scale off to give 'c' 'd'.
- Repeat the process from D to A. (12 x 1) (12)

4.2
- The tape should be drawn out in a straight line, in the direction in which it is coiled.
- If the tape jams in the case - tap the case gently to free the tape.
- Detach the reel from the tape when using the full length.
- Before applying tension on the tape makes certain that no kinks are in it.
- Do not allow vehicles to run over the tape.
- Do not step on the tape.
- After use wipe it dry.
- Do not exceed the standard pull.
- Do not leave the tape lying on the ground longer that is necessary.

(Any 5 × 1) (5)

4.3
$$A = \frac{(a+b)\times \perp h}{2}$$
$$A = \frac{[(0,235\,x\,2\,500)+(0,376\,x\,2\,500)]\,x\,(0,135\,x\,2\,500)}{2} \surd\surd$$
$$A = \frac{[(587,5)+(940)]\,x\,(337,5)}{2} \surd$$
$$A = 257\,765,63\,m^2 \surd$$
$$A = 25,77\,ha \surd$$

(5)

[22]

QUESTION 5

5.1 $Cs = S(1 - \cos\alpha)$

$Cs = 180(1 - \cos 6:12:00)$ √

$Cs = 1,053\,m$ √

CD = 180 + - 1, 053√

CD = 178, 947 m√ (4)

5.2 $Ct = L\,x\,e\,x\,(tm - ts)$

$Ct = 91\,x\,0,0000113\,x\,(20 - 25)$ √

$Ct = -0,005$ √

CD = 91 - 0, 005√

CD = 90, 995 m√ (4)

5.3 $Csl = \left(\frac{w^2 L^3}{24T^2}\right)$

$Csl = \left(\frac{0,01^2 91^3}{24(7^2)}\right)$ √

$Csl = 0,064\,m$ √

Cd = 91 - 0,064√

Cd = 90, 936 m√ (4)

[12]

QUESTION 6

6.1 6.1.1 Target√ – Used with tripod to elevate hidden or low survey points.√

6.1.2 Planimeter√ – Used to find the area of irregular figures.√

6.1.3 Plumb bop√ – Used to transfer points vertically.√

6.1.4 Chain√ – Used for linear measurement.√

6.1.5 Abney level√ – Used to determine gradient, slopes and vertical angles.√

(5 × 2) (10)

6.2 6.2.1 True
6.2.2 False
6.2.3 True
6.2.4 False
6.2.5 True (5 x 1) (5)

6.3
- Definition
- Brightness of image
- Magnification
- Size of field

(Any 2 × 1) (2)

[17]

QUESTION 7

- Chain
- Ranging rod
- Steel band
- Steel tapes
- Offset staff
- Plumb bop
- Dropping arrow
- Optical square
- Abney level
- Magnetic compass (Any 10 x 1) **[10]**

TOTAL: 100

Copyright reserved