higher education & training

Department:
Higher Education and Training
REPUBLIC OF SOUTH AFRICA

T110(E)(N24)T

NOVEMBER EXAMINATION

NATIONAL CERTIFICATE

BUILDING AND STRUCTURAL SURVEYING N4

(8060034)

24 November 2014 (Y-Paper)
13:00–16:00

Calculators may be used.

This question paper consists of 5 pages, 1 diagram sheet and 1 formula sheet.

ENGINEERING

Copyright reserved

DEPARTMENT OF HIGHER EDUCATION AND TRAINING
REPUBLIC OF SOUTH AFRICA

NATIONAL CERTIFICATE
BUILDING AND STRUCTURAL SURVEYING N4
TIME: 3 HOURS
MARKS: 100

INSTRUCTIONS AND INFORMATION

1. Answer ALL the questions.
2. Read ALL the questions carefully.
3. Number the answers according to the numbering system used in this question paper.
4. ALL the diagrams, sketches and drawings should be clear, large and in good proportion.
5. ALL the diagrams must be fully labelled and be done in PENCIL.
6. Write neatly and legibly.

ENGINEERING

Copyright reserved

QUESTION 1

Define the following survey terms:

1.1 A plan (2)

1.2 Isogonic lines (2)

1.3 A plane (2)
[6]

QUESTION 2

2.1 Name SIX surveying methods. (6)

2.2 Describe the TWO main objectives of surveying. (4)
[10]

QUESTION 3

3.1 What is meant by the term *one scale unit*? (2)

3.2 Errors and mistakes affect any measurement and are derived from three separate sources.

Name the THREE sources. (3)

3.3 Name the FOUR factors that will influence the accuracy of a map. (4)

3.4 The following diagram shows a triangular shaped plot.

Calculate the area of the plot in hectares.

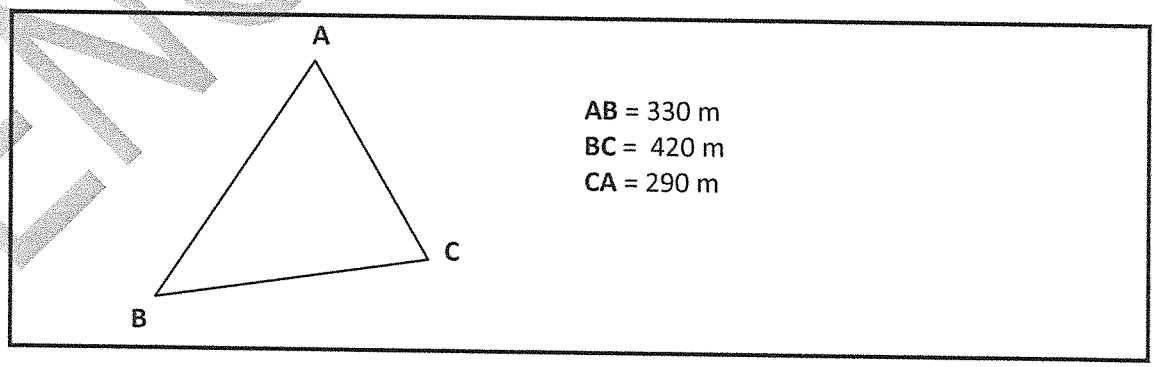

(5)

ENGINEERING

Copyright reserved

3.5 The average height of a piece of land in the shape of a trapezium is 250,5 m.

Calculate the volume of earth to be removed if the following information is known:

The level is to be reduced to 240,0 m
The long side of the trapezium is 46,0 m
The short side is 32,0 m
The perpendicular distance between the TWO sides is 44,0 m (8)
[22]

QUESTION 4

4.1 It is required to set off an exact distance of 175,0 m with a steel tape known to be 0,85% too short.

Calculate the distance to be measured off with this incorrect tape. (4)

4.2 A positive correction of 0,015 m was found when measuring a certain distance with a steel tape.
The standard temperature is 20 °C
The temperature at the time of measurement is 33 °C.
The coefficient of linear expansion is 0, 0000113/ °C.

Calculate the corrected distance. (6)

4.3 The horizontal distance between two points is exactly 110 m.

Calculate the slope distance if the vertical angle between the TWO points is 8° 28' 40". (4)

4.4 A horizontal length of 35,5 m was measured in catenary using a 100 m tape. A tension of 7 kgf was maintained on the tape which has a weight of 2 kg.

Calculate the correct distance. (6)
[20]

QUESTION 5

]

5.1 State FIVE factors that can make a tape temporarily incorrect. (5)

5.2 A basic surveying telescope consists of the components as shown in DIAGRAM SHEET 1, FIGURE 1.

Write the name of each component next to question number (5.2.1–5.2.7) in the ANSWER BOOK. (7)

ENGINEERING

Copyright reserved

5.3 DIAGRAM SHEET 1, FIGURE 2 shows a level set at **A** and a staff held at **B** and **C**.

The benchmark at **B** is 156, 6 m.

5.3.1 What is the *collimation height*? (2)

5.3.2 What is the *reduced level* at point **C**.? (2)

5.4 Staffs are manufactured for different purposes.

List THREE of these staffs. (3)

5.5 Name FIVE properties of a good staff. (5)
[24]

QUESTION 6

6.1 Describe how you would adjust the dumpy level to ensure that the bubble stays in the center of its run even if the instrument is rotated. (8)

6.2 Choose an item or a description from COLUMN B that matches a term/word/ in COLUMN A. Write only the letter (A–G) next to the question number (6.2.1–6.2.6) in the ANSWER BOOK.

COLUMN A	COLUMN B
6.2.1 Foresight	A used to keep excavations to an even gradient
6.2.2 Clinometer	B 180°
6.2.3 Catenary	C used for measuring ground slopes
6.2.4 Local attraction	D the sag of a tape
6.2.5 Radians	E the last reading taken after the instrument has been set up.
6.2.6 Boning rod	F an influence which prevents the compass needle pointing to magnetic north
	G 57° 17' 44.8"

(6 x 1) (6)

6.3 Name the FOUR methods of plane table surveying. (4)
[18]

TOTAL: 100

ENGINEERING

Copyright reserved

DIAGRAM SHEET 1

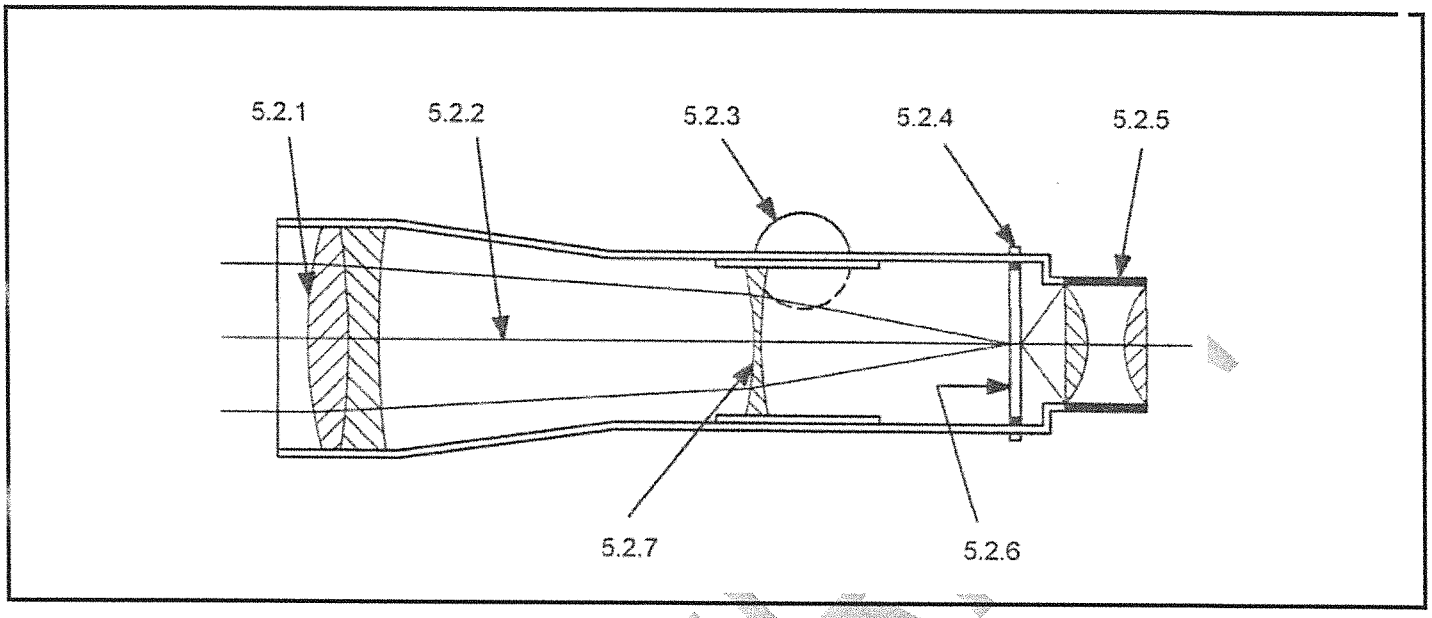

FIGURE 1

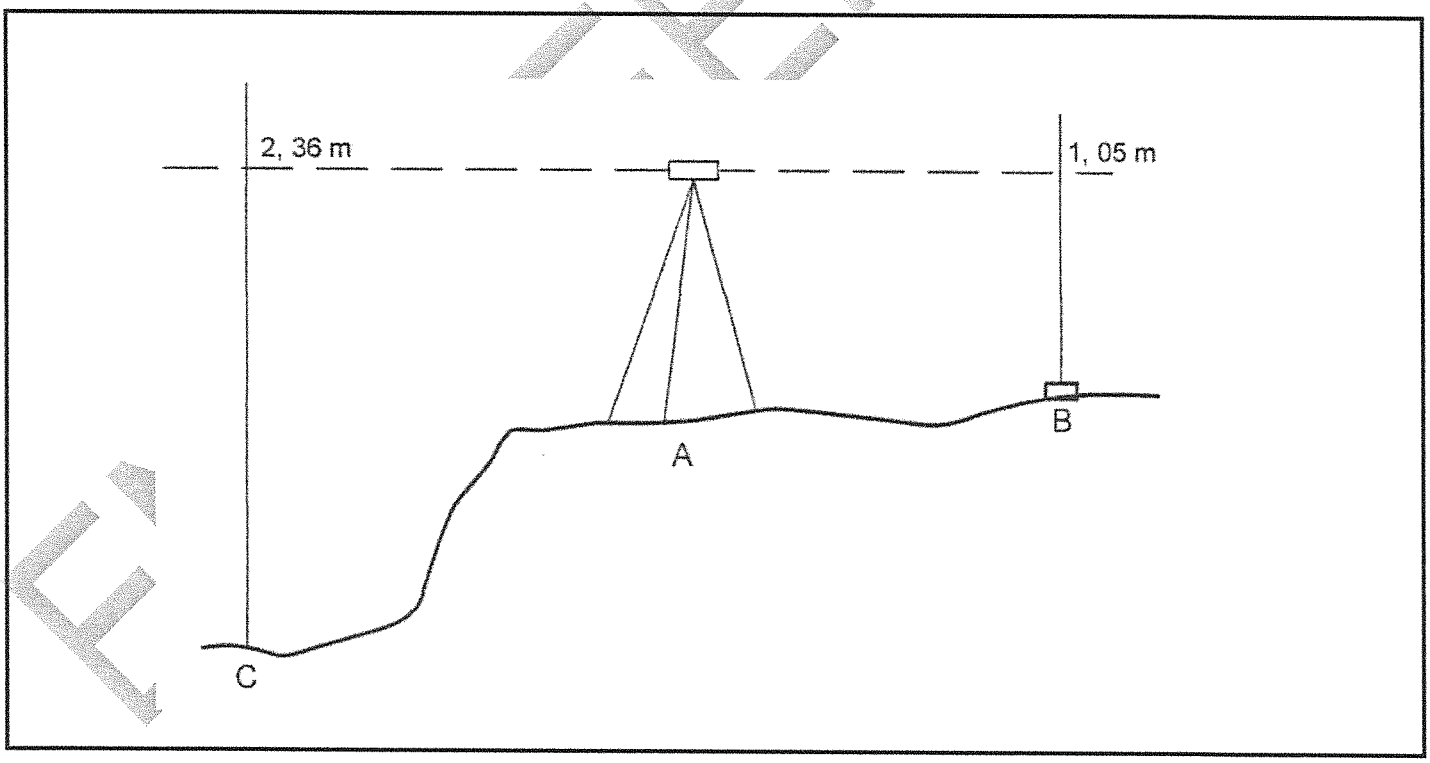

FIGURE 2

Copyright reserved

FORMULA SHEET

Any other applicable formula may also be used.

1. A = ½b × ⊥h

2. $A = \sqrt{s(s-a)(s-b)(s-c)}$, $s = \frac{a+b+c}{2}$

3. $A = \frac{(a+b) \times h}{2}$

4. $A = a \times h$

5. $A = \frac{d}{3}\left[(y_1 + y_n) + 2(y_3 + y_5 + ... + (y_{n-2})) + 4(y_2 + y_4 + ... + y_{n-1})\right]$

6. $A = d\left[\left(\frac{y_2 + y_n}{2}\right) + y_2 + y_3 + ... + y_{n-1}\right]$

7. $C = L \times e \times (t_m - t_s)$

8. $C = \frac{w^2 L^3}{24\, T^2}$

9. $C = L(1 - \cos\theta)$

10. $C = H(\sec\theta - 1)$

11. $C = \frac{L.H}{R}$

12. $A = \frac{1}{2} abSinC$

Copyright reserved

higher education & training

Department:
Higher Education and Training
REPUBLIC OF SOUTH AFRICA

MARKING GUIDELINE

NATIONAL CERTIFICATE

NOVEMBER EXAMINATION

BUILDING AND STRUCTURAL SURVEYING N4

24 NOVEMBER 2014

This marking guideline consists of 6 pages.

Copyright reserved

QUESTION 1

1.1 A plan is the representation (projected vertically) of features onto a horizontal plane surface, and may be looked upon as a large scaled detailed map of a small area. (2)

1.2 Isogonic Lines: They are imaginary lines joining places on the earth's surface where the magnetic declination is the same at a given time. (2)

1.3 A plane is the surface on which any straight line joining two points on it will touch the plane completely. (2)
[6]

QUESTION 2

2.1
- Chain surveying
- Direct levelling
- Indirect levelling
- Plane table
- Traversing
- Compass surveying
- Tacheometric surveying
- Barometric surveying
- Hydrographic surveying
- Photographic surveying
- Triangulation

(Any 6 x 1) (6)

2.2
- To construct maps, plans or profiles showing the relative positions and heights (or elevations) of existing features. (2 x 1) (2)
- To set out or establish the required positions and heights of new features in accordance with a predetermined plan. (2 x 1) (2)

[10]

QUESTION 3

3.1 It is the measured unit used to refer to the map and to the actual and true distance it represents. (2)

3.2
- Defects in the equipment √
- Observers natural disabilities √
- External conditions √

(3 x 1) (3)

Copyright reserved

3.3

- Control or framework √
- Scale √
- Speed and cost √
- Skill and experience √

(4 x 1) (4)

3.4

$$S = \frac{a+b+c}{2}$$

$$S = \frac{420+290+330}{2} \quad \surd$$

$$S = 520 \quad \surd$$

$$A = \sqrt{s(s-a)(s-b)(s-c)}$$

$$A = \sqrt{520(520-420)(520-290)(520-330)} \quad \surd$$

$$A = \sqrt{2272400000} \quad \surd$$

$$A = 4,77\,ha \quad \surd$$

(5 x 1) (5)

3.5

$$A = \frac{(a+b)\times \perp h}{2}$$

$$A = \frac{(46+32)\times 44}{2} \quad \surd$$

$$A = 1716\,m^2 \quad \surd$$

Vertical difference = Ground level - Required level √

= 250, 5 m - 240, 0 m √

= 10, 5 m √

V = A x h √

V = 1 716 m^2 x 10, 5 m √

V = 18 018 m^3 √

(8 x 1) (8)
[22]

Copyright reserved

QUESTION 4

4.1

$$Correct\ dis\tan ce = MDx\left(\frac{actual\ tape\ length}{graduated\ tape\ length}\right)\ \surd$$

$$175\ m = MDx\left(\frac{100-0,85}{100}\right)\ \surd$$

$$175\ m = MD\ x\ (0,9915)$$

$$\frac{175}{0,9915} = MD\ \surd$$

$$MD = 176,5\ m\ \surd$$

(4 x 1) (4)

4.2 $Ct = L\ x\ E\ x\ (Tm - Ts)\ \surd$

$$+0,015 = L\ x\ 0,0000113\ x\ (33-20)\ \surd$$

$$L = \frac{+0,015}{0,0000113\,x13}\ \surd$$

$$L = 102,110\,m\ \surd$$

CD = 102, 110 + 0, 015 √

CD = 102, 125 m √

(6 x 1) (6)

4.3

$$\cos\alpha = \frac{horizontal\ dis\tan ce}{sloping\ dis\tan ce}\ \surd$$

$$sloping\ dis\tan ce = \frac{horizontal\ dis\tan ce}{\cos\alpha}\ \surd$$

$$sloping\ dis\tan ce = \frac{110}{\cos 8°28'40"}\ \surd$$

$$sloping\ dis\tan ce = 111,215\,m\ \surd$$

(4 x 1) (4)

Copyright reserved

4.4 $w = \frac{2\,kg}{100\,m}$ √

w = 0. 02 kg/m √

$Cct = \frac{w^2 l^3}{24t^2}$

$Cct = \frac{(0,02)^2 (35,5)^3}{24(7)^2}$ √

$Cct = 0,015\ m$ √

Correct distance = 35, 5 – 0, 015 √

= 35, 485m √

(6 x 1) (6)
[20]

QUESTION 5

5.1
- Expansion or contraction caused by variations in temperature.
- When a tape is suspended in catenary and supported only at the ends.
- Uneven pull
- When the tape is not tight and straight.
- Errors in reading and booking.

(5 x 1) (5)

5.2.
- Object lens
- Collimation line
- Focusing screw
- Diaphragm adjusting screws or capstan adjusting screws
- Eyepiece
- Diaphragm
- Focusing lens

(7 x 1) (7)

5.3 5.3.1 156, 6 + 1, 05 = 157, 65 m √√ (2)
5.3.2 157, 65 – 2, 36 = 155, 29 m √ √ (2)

5.4
- Levelling staff
- Invar staff
- Tacheometric staff

(3 x 1) (3)

Copyright reserved

5.5
- It must be robust
- It must be precise
- It must be possible to read without doubt
- It must be of high quality
- It must be highly visible
- It must be light
- It must be easy to carry around
- It must be of narrow section
- It must be rigid

(Any 5 x 1) (5)
[24]

QUESTION 6

6.1
- Position the telescope over two foot screws.
- Adjust the foot screws to bring the bubble to the centre of its run.
- Turn the telescope 90° over the third foot screw
- Adjust the foot screw to bring the bubble to the center of its run.
- Turn the telescope a further 90° if the bubble does not return to the centre note the amount it is off center and use the two foot screws to turn it halfway back to center.
- Turn the telescope a further 90° if the bubble does not return to the centre note the amount it is off center and use the third foot screw to turn it halfway back to center.
- Adjust the bubble adjusting screws to centralize the bubble.
- When complete, check again and repeat adjustment if necessary.

(8 x 1) (8)

6.2
6.2.1 **E**
6.2.2 **C**
6.2.3 **D**
6.2.4 **F**
6.2.5 **B**
6.2.6 **A**

(6 x 1) (6)

6.3
- Radiation
- Traversing
- Intersections
- Resection

(4 x 1) (4)
[18]

TOTAL: 100

Copyright reserved