201311T033

higher education & training

Department:
Higher Education and Training
REPUBLIC OF SOUTH AFRICA

T170(E)(N13)T
NOVEMBER EXAMINATION

NATIONAL CERTIFICATE

BUILDING AND STRUCTURAL SURVEYING N4

(8060034)

13 November 2013 (X-Paper)
09:00–12:00

Calculators may be used.

This question paper consists of 5 pages, 1 diagram sheet and 1 formula sheet.

Copyright reserved dhet

DEPARTMENT OF HIGHER EDUCATION AND TRAINING
REPUBLIC OF SOUTH AFRICA

NATIONAL CERTIFICATE
BUILDING AND STRUCTURAL SURVEYING N4
TIME: 3 HOURS
MARKS: 100

INSTRUCTIONS AND INFORMATION

1. Answer ALL the questions.
2. Read ALL the questions carefully.
3. Number the answers according to the numbering system used in this question paper.
4. ALL the diagrams, sketches and drawings should be large and in good proportion, fully and clearly labelled and done in pencil.
5. Write neatly and legibly.

MANGEMENT COPY

Copyright reserved dhet

QUESTION 1

Define the following survey terms:

1.1 Reduced level

1.2 Meridian convergence

1.3 Magnetic declination

(3 x 2) **[6]**

QUESTION 2

2.1 Name FOUR types of surveying. (4)

2.2 State FIVE points to be carefully observed when taking field notes. (10)
[14]

QUESTION 3

3.1 Distinguish between *natural scales* and *engineering scales*. (4)

3.2 A rectangular farm measures 2 200 m x 800 m.

Draw the farm to scale 1 : 20 000 in the ANSWER BOOK. (4)

3.3 The area of a rectangular site is 0,98 ha. The site is twice as long as it is wide.

Calculate the perimeter of the site. (6)
[14]

QUESTION 4

4.1 Name FOUR typical mistakes that could occur during taping. (4)

4.2 Name FIVE means of maintenance and handling of steel tapes. (5)

4.3 What is meant by the following?

4.3.1 Standard pull

4.3.2 Standard temperature

(2 x 2) (4)
[13]

Copyright reserved dhet

QUESTION 5

5.1 A distance of 75,60 m between A and B was measured with a tape at a slope of 32 : 26 : 44.

Calculate the horizontal distance between A and B.

5.2 A distance was measured and found to be 137,66 m at a temperature of 29 °C. The standard temperature of the tape is 20 °C and the coefficient of linear expansion of the steel tape is 0,0000113/°C.

Calculate the correct distance.

5.3 A distance of 234,76 m was measured as 950 m above sea-level.

Calculate the length at sea-level if the radius of the earth is 6 373 km.

(3 x 4) **[12]**

QUESTION 6

6.1 Define the following survey terms:

6.1.1 Foresight

6.1.2 Closed survey

6.1.3 Tacheometry

(3 x 2) (6)

6.2 What is the purpose of the bubble tube in surveying instruments? (2)

6.3 What are the FOUR important qualities regarding the properties of a surveying telescope? (4)

6.4 FIGURE 1, on the DIAGRAM SHEET (attached) shows a section through a spirit level of a levelling instrument.

Label the numbered parts and write the answers next to the numbers (6.4.1–6.4.7) in the ANSWER BOOK. (7)

[19]

Copyright reserved dhet

QUESTION 7

7.1 When planning to carry out a chain survey over a site, certain practices have to be followed.

State SIX of these practices. (6)

7.2 FIGURE 2, on the DIAGRAM SHEET (attached) shows a site with corner posts A, B, C and D.

Explain how you would use the plane table to plot the corner posts by means of the radiation method.

Do the necessary sketches on FIGURE 2 to motivate your explanation. (10)

7.3 Make neat sketches of the following and state the function of each:

7.3.1 Sight rail

7.3.2 Boning rod

(2 x 2) (4)

7.4 Show, by means of simple sketches, how the following details are shown on a detailed map:

7.4.1 Swamp

7.4.2 Hedges

(2 x 1) (2)
[22]

TOTAL: 100

Copyright reserved dhet

BUILDING AND STRUCTURAL SURVEYING N4

FORMULA SHEET

Any other applicable formula may also be used.

1. $A = \frac{1}{2}b \times \perp h$

2. $A = \sqrt{s(s-a)(s-b)(s-c)}\ ,\ s = \frac{a+b+c}{2}$

3. $A = \frac{(a+b) \times h}{2}$

4. $A = a \times h$

5. $A = \frac{d}{3}\left[(y_1 + y_n) + 2(y_3 + y_5 + \ldots + (y_{n-2})) + 4(y_2 + y_4 + \ldots + y_{n-1})\right]$

6. $A = d\left[\left(\frac{y_2 + y_n}{2}\right) + y_2 + y_3 + \ldots + y_{n-1}\right]$

7. $C = L \times e \times (t_m - t_s)$

8. $C = \frac{w^2 L^3}{24\,T^2}$

9. $C = L(1 - \cos\theta)$

10. $C = H(\sec\theta - 1)$

11. $C = \frac{L.H}{R}$

12. $A = \frac{1}{2}\,abSinC$

Copyright reserved dhet

EXAMINATION NUMBER:

DIAGRAM SHEET

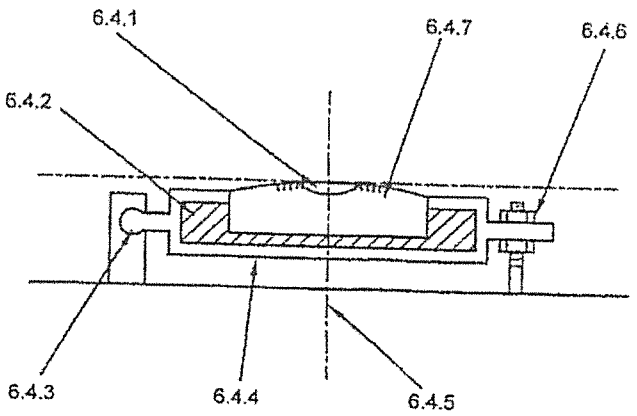

FIGURE 1

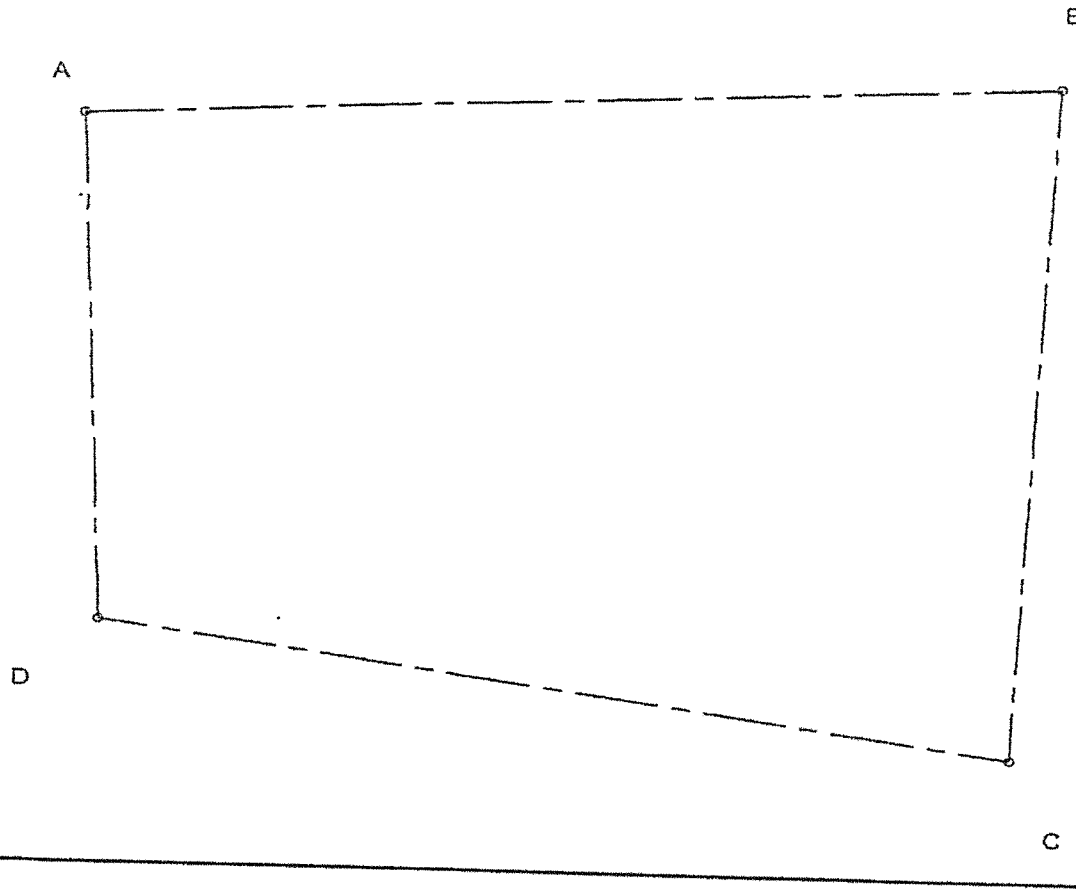

FIGURE 2

Copyright reserved dhet

higher education & training

Department:
Higher Education and Training
REPUBLIC OF SOUTH AFRICA

MARKING GUIDELINE

NOVEMBER EXAMINATION

BUILDING AND STRUCTURAL SURVEYING N4

13 NOVEMBER 2013

This marking guideline consists of 8 pages.

Copyright reserved

QUESTION 1

1.1 A reduced level is the vertical distance between a survey point and the adopted level datum.

1.2 Is when grid north coincides with true north

1.3 The difference between true north and magnetic north

(3 x 2) **[6]**

QUESTION 2

2.1
- Plane surveying √
- Geodetic Surveying √
- Topographical Surveying √
- Cadastral Surveying √
- Engineering Surveys

(Any 4 × 1) (4)

2.2
- Neat figures and legible printing.√ √
- Clear sketches √√
- Clearness in representing the points to which offsets have been taken.√√
- Add explanatory notes wherever necessary to avoid ambiguity.√√
- Cross index wherever possible. √√
- Keep the field book clean.
- Leave nothing to the memory. Record everything.
- Use hardish pencil (2H) and keep it sharp.
- Make a sketch to show location of stations
- Take bearing from true or magnetic north
- Book systematically

(Any 5 × 2) (10)
[14]

QUESTION 3

3.1 Natural scales are the *relation between* the *same units of measurement* whereas engineering scales are *the relation between* two *different units of measurement.*

(4 × 1) (4)

3.2
$$Length = \frac{2\ 200\ x 1\ 000}{20\,000}$$
$$Length = 110\ mm \quad \surd$$

$$Width = \frac{800\ x 1\ 000}{20\,000}$$
$$Width = 40\ mm \quad \surd$$

Copyright reserved

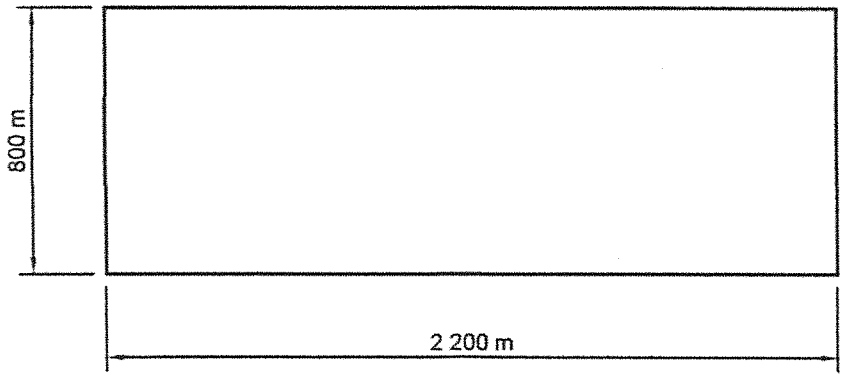

√ x 2 = 2
For correct drawing √ x 2 = 2
4 (4)

3.3 $A = L\,x\,W$

$0,98\,ha = 2W\,x\,W$ √

$0,98\,x10\,000 = 2W^2$ √

$2W^2 = 0,98\,x10\,000$

$W = \sqrt{\frac{0,98\,x10\,000}{2}}$ √

$W = 70\,m$ √

$L = 140\,m$ √

Perimeter = 2(70) + 2(140)

Perimeter = 420 m √ (6)
[14]

QUESTION 4

4.1
- Reading numbers incorrectly.√
- Measuring the slope of the ground instead of the slope of the tape√
- Tapes not kept on the zero mark√
- Applying excessive tension√
- Booking numbers incorrectly √
- Forgetting to book a distance √
- Booking the wrong number as a correct number. √ (Any 4 × 1) (4)

Copyright reserved

4.2
- The tape should be drawn out in a straight line, in the direction in which it is coiled.√
- If the tape jams in the case - tap the case gently to free the tape.√
- Detach the reel from the tape when using the full length.√
- Before applying tension on the tape makes certain that no kinks are in it.√
- Do not allow vehicles to run over the tape.√
- Do not step on the tape.
- Booking the wrong number as a correct number.
- After use wipe it dry.
- Do not exceed the standard pull.
- Do not leave the tape lying on the ground longer that is necessary.

(Any 5 × 1) (5)

4.3 4.3.1 Every tape is standardised to be accurate at a certain pull (if the pull applied is greater than that of which the tape is standardised the tape will be correspondingly too long or too short). √√ (2)

4.3.2 A tape is standardised to be correct at a certain temperature. (a tape can become temporarily incorrect due to expansion or contraction caused by variation in temperature). √√ (2)

[13]

QUESTION 5

5.1 $$\cos\alpha = \frac{horisontal\ dis\tan ce}{sloping\ dis\tan ce}\ \surd$$

Horizontal distance = slope distance x cos32°26'44" √

Horizontal distance = 75,60 m x cos32°26'44" √

Horizontal distance = 63,799 m √

OR

Cs = L (1 – cosA)

= 75, 60(1 – cos32°26'44")

= 11,801 m √

CD = MD + correction

= 75,60 + (-11, 801) √

= 63,788 m √

5.2 $Ct = L\ x\ E\ x\ (Tm - Ts)$

$Ct = 137,\ 66\ x\ 0,0000113\ x\ (29 - 20)$ √

$Ct = 0,014\ m$ √

CD = MD + correction

= 137, 66 + 0, 014√

= 137, 674 m √

5.3 $C_{alt} = \frac{LH}{R}$

$C_{alt} = \frac{234,76\ x\ 950}{6\ 373\ x\ 1\ 000}$ √

$C_{alt} = 0,035\ m$ √

CD = MD + correction

= 234,76 + (-0, 035) √ (corrections above sea level are negative)

= 234,725 m √

(3 x 4) **[12]**

QUESTION 6

6.1 6.1.1 The last reading from an instrument position. It is taken on a fixed point or a footplate.

6.1.2
- The survey starts on a known point and ends on a known point. √√
- The survey starts and ends at the same point.

6.1.3
- The method of surveying where distances and elevation of points obtained by theodolite and staff. √√
- Distances and heights are obtained by optical means.

(Any 3 x 2) (6)

6.2 The purpose of the level/bubble tube is to set the instrument's line of sight perpendicular to the direction of gravity. (2)

Copyright reserved

6.3
- Definition √
- Image brightness √
- Magnification √
- Size of field √

(4 × 1) (4)

6.4 6.4.1 Bubble √

6.4.2 Plaster of paris √

6.4.3 Ball joint/hinge √

6.4.4 Container √

6.4.5 Vertical axis √

6.4.6 Capstan/adjusting screws √

6.4.7 Bubble tube √

(7 × 1) (7)
[19]

QUESTION 7

7.1
- The base line should be as long as practicable, √
- The base line must run through the middle of the site. √
- All triangles must be based on the base line or tied back to it, √
- All triangles must be provided with a check. √
- Main chain lines to be as close as possible to the boundary lines in order to reduce off-set lengths. √
- Lines should be as near horisontal as possible. √
- Lines should be free from obstruction.
- The number of lines should be kept to a minimum.
- Triangles with an apex less than 30° or greater than 120° should be avoided.

(Any 6 × 1) (6)

7.2 Place a peg at a suitable position P. √
Set up the plane table over peg P and level the table. √
Mark of the north direction. √
Transfer P vertically to P on the plane table. √
From P draw rays to A, B, C and D. √
From P measure the distance to A. √
Scale this distance along ray PA to mark off a. √
Measure the distances PB, PC and PD and scale off Pb, Pc and Pd along their respective rays. √
Join a, b c and d. √

Copyright reserved

SKETCH √

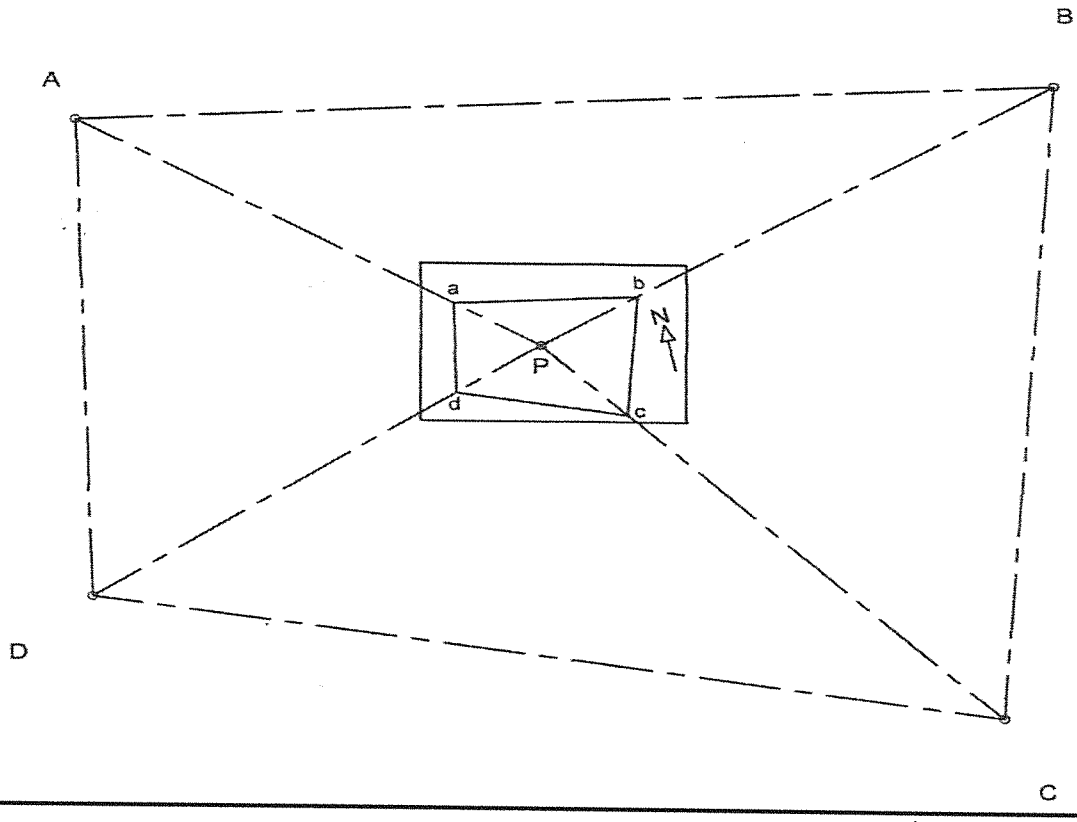

(10 × 1) (10)

7.3 7.3.1

Sketch √

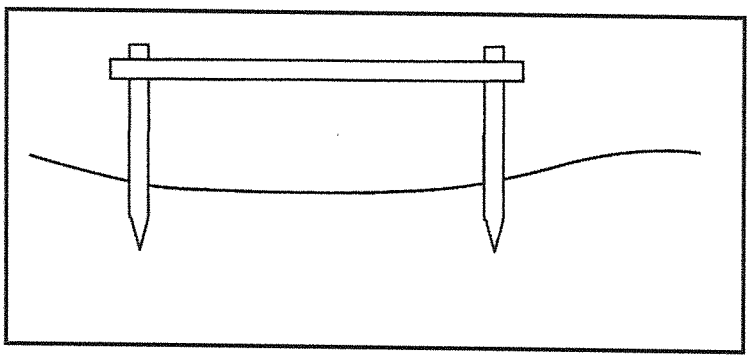

Sight rails are fixed to provide the desired gradient for excavation or fill. At least two are required to provide the gradient.√

Copyright reserved

7.3.2

Sketch √

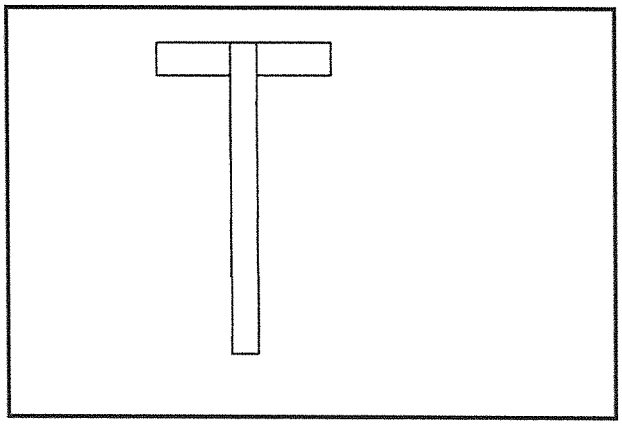

Boning rods ensure that the excavation or fill is kept uniform with the gradient. √

(2 × 2) (4)

7.4 7.4.1

Sketch √

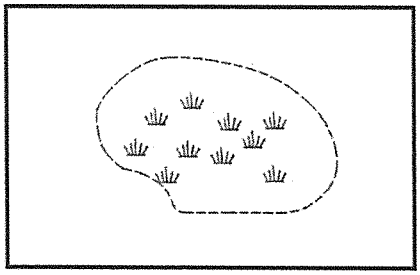

7.4.2

Sketch √

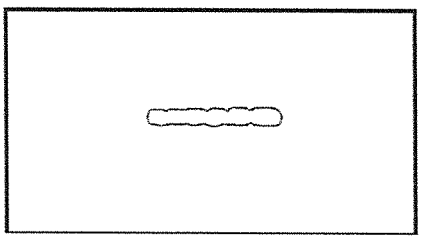

(2 x 1) (2)
[22]

TOTAL: 100

Copyright reserved