higher education & training

Department:
Higher Education and Training
REPUBLIC OF SOUTH AFRICA

T160**(E)**(A13)T

NATIONAL CERTIFICATE

BUILDING AND STRUCTURAL SURVEYING N4

(8060034)

13 August 2019 (X-Paper)
09:00–12:00

Calculators and drawing instruments may be used.

This question paper consists of 6 pages and 1 formula sheet.

Copyright reserved

DEPARTMENT OF HIGHER EDUCATION AND TRAINING
REPUBLIC OF SOUTH AFRICA

NATIONAL CERTIFICATE
BUILDING AND STRUCTURAL SURVEYING N4
TIME: 3 HOURS
MARKS: 100

INSTRUCTIONS AND INFORMATION

1. Answer ALL the questions.
2. Read ALL the questions carefully.
3. Number the answers according to the numbering system used in this question paper.
4. Write neatly and legibly.

Copyright reserved

QUESTION 1

Indicate whether the following statements are TRUE or FALSE. Choose the answer and write only 'True' or 'False' next to the question number (1.1–1.10) in the ANSWER BOOK.

1.1 Intermediate sight is the first reading taken after setting up the level.

1.2 The tripod stand consists of three legs which may be solid framed.

1.3 A change plate is a rectangular steel plate with a pin at the centre and three corners turned down.

1.4 Mean sea level is the level of the sea on the earth surface.

1.5 A plain member is used for measuring an area for irregular shape.

1.6 A trough compass consists of a short, narrow, rectangular box covered with glass.

1.7 An alidade is a sight rule with sighting vanes at both ends used for sighting the direction of the distant target.

1.8 An Abney level is used to measure horizontal and vertical distance.

1.9 The purpose of fieldwork is to record field notes accurately using standard methods.

1.10 A planimeter is a mechanical instrument used to calculate irregular areas for which there is no formula such as the area of a lake on a map.

(10 × 1) **[10]**

QUESTION 2

2.1 Name FOUR factors that will influence the accuracy of a map. (4)

2.2 Name FIVE typical mistakes that can occur during taping. (5)

2.3 Name FIVE practical suggestions to consider during field operation. (5)

[14]

Copyright reserved

QUESTION 3

3.1 Explain and give the use of a divided scale line. (3)

3.2 Calculate the representative fraction if 10 mm on a map represents 10 m on the ground. (3)

3.3 The three sides of a smallholding are 100 m, 180 m and 210 m.

Calculate the area in hectares. (9)

3.4 Calculate the distance between two points on a map if the representative fraction is 1:10 000 and the actual ground distance is 1 250 m. (4)

[19]

QUESTION 4

FIGURE 1 shows a theodolite.

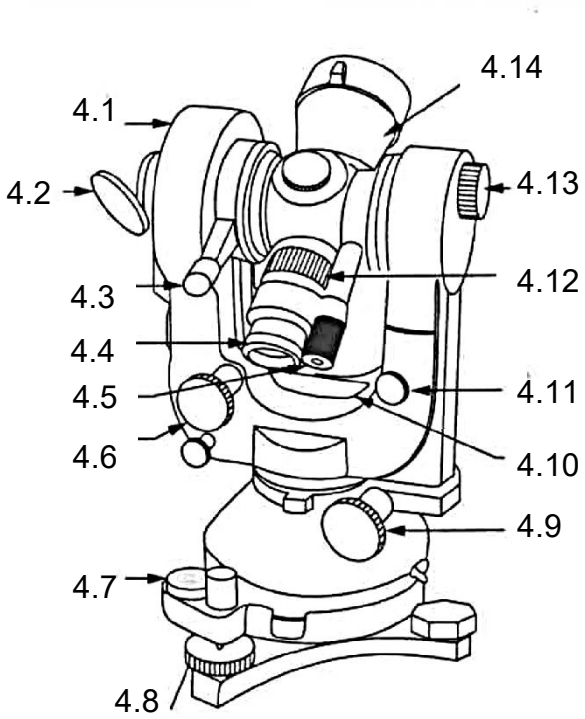

FIGURE 1

Label the parts of the theodolite by writing only the answer next to the question number (4.1–4.14) in the ANSWER BOOK. (14 × 1) **[14]**

QUESTION 5

5.1 Explain the purpose of surveying. (5)

5.2 Explain each of the following surveying methods:

5.2.1 Tacheometric surveying (3)

5.2.2 Traversing (3)

5.2.3 Compass surveying (2)

[13]

QUESTION 6

6.1 What are the THREE fundamental differences between a *dumpy level* and a *tilting level*? (3)

6.2 FIGURE 2 shows a dumpy level set up at A and a staff held at BM and C.

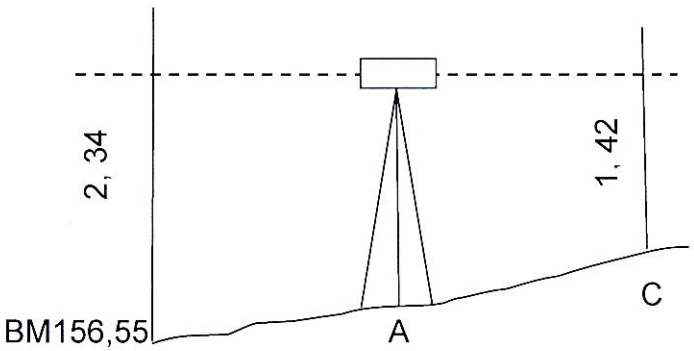

FIGURE 2

6.2.1 What is the collimation height? (2)

6.2.2 What is the reduced level at point C? (2)

[7]

QUESTION 7

7.1 A distance was measured with a 100 m tape and found to be 600 m. It was later discovered that the tape was 0,06 m too long.

Calculate the correct distance. (3)

7.2 A length of 37,5 m was measured horizontally in catenary. The mass of the tape used is 0,015 kg/m and the tension applied is 7 kgf.

Calculate the correct length. (4)

7.3 A distance of 96 m was measured with a steel tape at a temperature of 20 °C.

Calculate the correct length if the standard temperature of the tape is 25 °C and the coefficient of linear expansion is $1{,}13 \times 10^{-5}$/°C. (5)

7.4 A distance AB was measured at a slope of 5° 25' and found to be 250 m.

Calculate the horizontal distance. (4)
[16]

QUESTION 8

8.1 Define *orientation* with regard to plane tabling. (3)

8.2 Briefly explain *systematic errors*. (4)
[7]

TOTAL: 100

Copyright reserved

FORMULA SHEET

Any other applicable formula may also be used.

1. $\mathrm{A} = ½\mathrm{b} \times \perp \mathrm{h}$

2. $A = \sqrt{s(s-a)(s-b)(s-c)}$, $s = \dfrac{a+b+c}{2}$

3. $A = \dfrac{(a+b) \times h}{2}$

4. $A = a \times h$

5. $A = \dfrac{d}{3}\left[(y_1 + y_n) + 2(y_3 + y_5 + ... + (y_{n-2})) + 4(y_2 + y_4 + ... + y_{n-1})\right]$

6. $A = d\left[\left(\dfrac{y_2 + y_n}{2}\right) + y_2 + y_3 + ... + y_{n-1}\right]$

7. $C = L \times e \times (t_m - t_s)$

8. $C = \dfrac{\mathrm{w}^2 L^3}{24\, T^2}$

9. $C = L(1 - \cos\theta)$

10. $C = H(\sec\theta - 1)$

11. $C = \dfrac{L.H}{R}$

12. $A = \dfrac{1}{2}\, abSinC$

Copyright reserved