

higher education & training

Department:
Higher Education and Training
REPUBLIC OF SOUTH AFRICA

T110(E)(A1)T
**AUGUST EXAMINATION**

**NATIONAL CERTIFICATE**

# BUILDING AND STRUCTURAL SURVEYING N4

(8060034)

**1 August 2014 (Y-Paper)**
**13:00–16:00**

**Calculators may be used.**

**This question paper consists of 5 pages, 2 diagram sheets and 1 formula sheet.**

ENGINEERING

Copyright reserved

# DEPARTMENT OF HIGHER EDUCATION AND TRAINING
# REPUBLIC OF SOUTH AFRICA

NATIONAL CERTIFICATE
BUILDING AND STRUCTURAL SURVEYING N4
TIME: 3 HOURS
MARKS: 100

---

**INSTRUCTIONS AND INFORMATION**

1. Answer ALL the questions.
2. Read ALL the questions carefully.
3. Number the answers according to the numbering system used in this question paper.
4. ALL the diagrams, sketches and drawings should be large and in good proportion, fully and clearly labelled and done in pencil.
5. Write neatly and legibly.

---

ENGINEERING

Copyright reserved

## QUESTION 1

Define the following survey terms:

1.1 Map

1.2 Agonic lines

1.3 Plane surveying

(3 x 2) **[6]**

## QUESTION 2

2.1 Explain the term *reconnaissance* as used in surveying. (5)

2.2 Explain the difference between *closed surveying* and *open surveying*. (3)

2.3 Why is close surveying preferred to open surveying? (2)

**[10]**

## QUESTION 3

3.1 Describe and give the use of a divided scale line. (3)

3.2 Calculate the true distance on the ground if the distance between two points on a map is 112 mm and the representative fraction is 1 : 2 500. (3)

3.3 Calculate the representative fraction if 1 cm on a map represents 2 km on the ground. (3)

3.4 A rectangular plot was measured on a map and found to be 6,75 hectares. The length of one side of the plot is three times longer than the width.

Calculate the length of the sides.

Draw the plot to scale 1 cm = 50 m

Show ALL the dimensions. (6)

3.5 The direction of a line AB is 300 E.
What is the quadrant bearing of the line? (2)

3.6 Convert 336 centesimal measurement grades to degrees, minutes and seconds. (3)

**[20]**

ENGINEERING

## QUESTION 4

4.1 Give FIVE typical mistakes that can occur during taping. (5)

4.2 A measured distance of 35,398 m was obtained with a steel tape at 30 °C.

Calculate the standard temperature if the coefficient of linear expansion is 0, 0000113/ C and the temperature correction is + 0,004 m. (5)

4.2 A length of 37, 5 m was measured horizontally in catenary. The mass of the tape used is 0,015 kg/m and the tension applied is 7 kgf.

Calculate the correct distance. (4)

4.4 A length of 175 m was measured with a steel tape 1 500 m below sea-level. The radius of the earth is 6 373 kilometers.

Calculate the correct distance. (4)
**[18]**

## QUESTION 5

5.1 Briefly describe how an electronic distance measuring instrument works. (6)

5.2 State FIVE factors that can make a tape permanently incorrect. (5)
**[11]**

## QUESTION 6

6.1 DIAGRAM SHEET 1 shows five different types of instruments.

Next to each instrument number (6.1.1–6.1.5) write the name and use of each instrument in the ANSWER BOOK. (10)

6.2 Give FIVE requirements of a magnetic needle of a compass. (5)

ENGINEERING

Copyright reserved 

6.3 Indicate whether the following statements are TRUE or FALSE. Choose the answer and write only 'true' or 'false' next to the question number (6.3.1–6.3.5) in the ANSWER BOOK.

6.3.1 Local heights are those to which an arbitrary height (value) has been assigned.

6.3.2 The 'X' coordinates are negative to the east of the central meridian.

6.3.3 Slope corrections are always positive.

6.3.4 A scale of 1 : 1 000 is larger than a scale of 1 : 100.

6.3.5 A back sight is the first reading taken after the instrument has been set up.

(5 × 1) (5)
**[20]**

**QUESTION 7**

7.1 Give FIVE advantages of using a plane table. (5)

7.2 The field book, DIAGRAM SHEET 2, gives details of a chain survey.

ALL measurements are given in meters.

In the ANSWER BOOK, plot the stations, lines and detail to scale 1 : 500. (10)
**[15]**

**TOTAL: 100**

ENGINEERING

Copyright reserved

## DIAGRAM SHEET 1

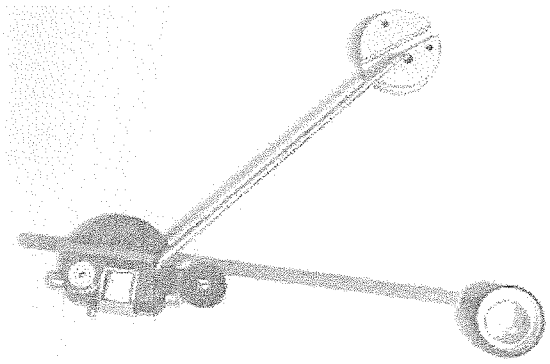

6.1.1

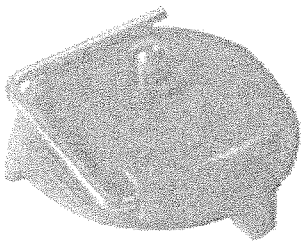

6.1.2



6.1.3



6.1.4



6.1.5

ENGINEERING

Copyright reserved

## DIAGRAM SHEET 2

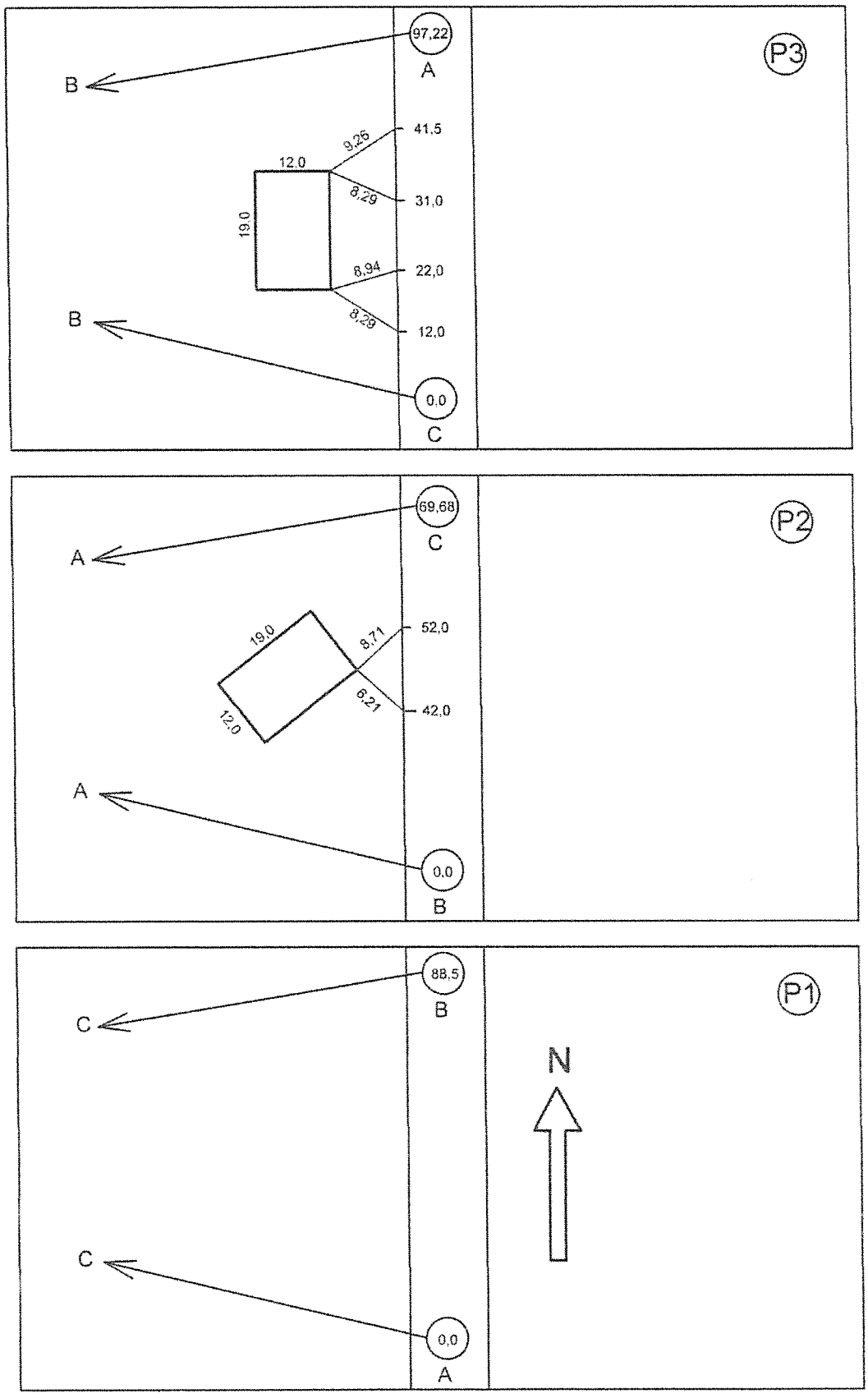


Copyright reserved

# BUILDING AND STRUCTURAL SURVEYING N4

## FORMULA SHEET

Any other applicable formula may also be used.

1. $A = \frac{1}{2}b \times \perp h$

2. $A = \sqrt{s(s-a)(s-b)(s-c)}$ , $s = \frac{a+b+c}{2}$

3. $A = \frac{(a+b) \times h}{2}$

4. $A = a \times h$

5. $A = \frac{d}{3}\left[(y_1 + y_n) + 2(y_3 + y_5 + \ldots + (y_{n-2})) + 4(y_2 + y_4 + \ldots + y_{n-1})\right]$

6. $A = d\left[\left(\frac{y_2 + y_n}{2}\right) + y_2 + y_3 + \ldots + y_{n-1}\right]$

7. $C = L \times e \times (t_m - t_s)$

8. $C = \frac{w^2 L^3}{24\,T^2}$

9. $C = L(1 - \cos\theta)$

10. $C = H(\sec\theta - 1)$

11. $C = \frac{L.H}{R}$

12. $A = \frac{1}{2}\,abSinC$

ENGINEERING

Copyright reserved

higher education & training

Department:
Higher Education and Training
REPUBLIC OF SOUTH AFRICA

# MARKING GUIDELINE

## NATIONAL CERTIFICATE

## AUGUST EXAMINATION

## BUILDING AND STRUCTURAL SURVEYING N4

## 1 AUGUST 2014

**This marking guideline consists of 7 pages.**

Copyright reserved

## QUESTION 1

1.1 A map can be defined as the representation of outlines or features of a large area to a small scale.

1.2 Are imaginery lines joining places on the earths surface where the declination of a given point is zero

1.3 In plane surveying the curvature of the earth's surface is not taken into acccount.

(3 × 2) **[6]**

## QUESTION 2

2.1
- Before taking measurements the surveyor have to carefully examine the area to be surveyed.
- This is done so that he can plan his work accordingly and decide which survey method he will employ. He will also select the stations he will use (5)

2.2
- In close surveying the surveyor works from a known point to another known point or from a particular point and back to that same point.
- In open surveying the surveyor works from a point to an unknown point. (3)

2.3 In close surveying the work can be checked for accuracy whereas in open surveying the work cannot be checked. (2)

**[10]**

## QUESTION 3

3.1
- An expression of the scale is given graphically in the form of a divided scale line. √
- This is a straight line of given length equally divided into primary divisions. √
- Measurement is done by means of a divider. √ (3)

3.2
RF = 1 : 2 500
Map distance = 112 mm
Actual distance = 112 x 2500√
= 280 000 mm√
= 280 m√ (3)

3.3
1 cm = 2 km
1 cm = 2 000 m √
10 mm = 2 000 000 mm √
RF 1 = 200 000 √ (3)

Copyright reserved 

3.4

| | | | |
|---|---|---|---|
| Area | = | L x B | |
| 6, 75 ha | = | 3B x B | √ |
| 6, 75 x 10 000 | = | $3B^2$ | |
| 67 500 | = | $3B^2$ | |
| $\frac{67\,500}{3}$ | = | $B^2$ | √ |
| 22 500 | = | $B^2$ | |
| B | = | 150 m | √ |
| 3B | = | 450 m | √ |

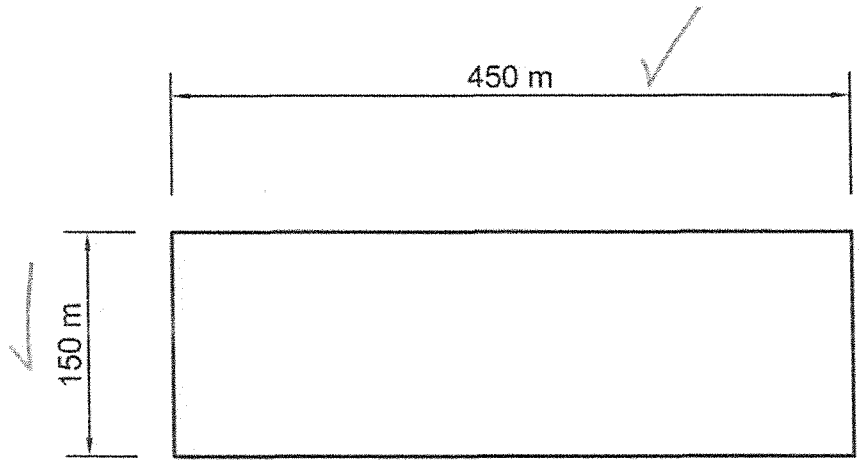


(6)

3.5 S 60E E (2)

3.6

| | | | |
|---|---|---|---|
| 360E | = | $400^g$ | |
| X | = | $336^g$ | √ |
| X | = | $\frac{336x360}{400}$ | √ |
| | = | 302 ° 24' 0 " | √ |

(3)
**[20]**

## QUESTION 4

4.1
- Wrong readings
- Wrong bookings
- Measuring the slope of the ground instead of the slope of the tape.
- Reading numbers inaccurate.
- Not keeping the tape on the zero mark.
- Booking wrong numbers as the correct number. (Any 5 x 1) (5)

4.2

$$CT = L\ x\ E\ x\ (Tm - Ts)\ \surd$$

$$+0{,}004 = 35{,}398\ x\ 0{,}0000113\ (30 - Ts)\ \surd$$

$$\frac{+0{,}004}{35{,}398\ x\ 0{,}0000113} = 30 - Ts\ \surd$$

$$Ts = 30 - \left(\frac{0{,}004}{35{,}398\ x\ 0{,}0000113}\right)\surd$$

= 20EC√ (5 × 1) (5)

4.3

$$Cct = \frac{w^2 l^3}{24t^2}$$

$$Cct = \frac{(0{,}015)^2 (37{,}5)^3}{24(7)^2}\surd$$

$$Cct = 0{,}01\ m\surd$$

Correct distance = 37,5 – 0, 01√

= 37, 49 m√ (4 x 1) (4)

4.4

$$Ch = \frac{LH}{R}$$

$$Ch = \frac{175\ x\ 1500}{6373000}\surd$$

$$Ch = 0{,}041\ m\surd$$

Correct distance = 175 + 0, 041√

= 175, 041 m√ (4 x 1) (4)

**[18]**

Copyright reserved 

## QUESTION 5

5.1
- An electronic distance measuring instrument placed at one end of the line transmits electro-magnetic waves√ to a retro-reflector positioned at the other end of the line.√
- The retro-reflector returns the waves√ to the transmitter√, which then computes the slant length√ of the line and displayes it s a digital read-out.√

(6 × 1) (6)

5.2
- Permanent shrinkage due to defects of material
- Excessive amount of tension.
- A short piece broken off
- A short piece added on
- Incorrect graduation during manufacturing.
- An overlap or gap when attempting to repair the tape
- A knot due to temporary repair

(6 × 1) (5)
**[11]**

## QUESTION 6

6.1 6.1.1 PLanimeter√
Used to find the area of irregular figures.√

6.1.2 Change plate/Staff support√
Used to support the staff on soft ground.√

6.1.3 Staff bubble√
Used to keep the staff in a vertical position.√

6.1.4 Builders level√
Used to check/transfer levels or verticality over a short distance.√

6.1.5 Ranging rod √
- for aligning survey lines√
- for offset measurement √

(Any ONE)
(5 × 2) (10)

6.2
- it should be sensitive
- the magnetic axis should coincide with the geometrical axis.
- the ends should lie in the same horizontal and vertical planes as the pivot point.
- the centre of gravity should be as far below the pivot point as possible.
- the housing box should be non-magnetic.

(5 × 1) (5)

Copyright reserved 

6.3 6.3.1 True
6.3.2 False
6.3.3 False
6.3.4 False
6.3.5 True

(5 x 1) (5)
**[20]**

## QUESTION 7

7.1
- Field notes are reduced to a minimum.
- Since the area surveyed in view, gross mistakes are unlikely.
- Tedious measurement of long distances are avoided.
- The work is interesting and the surveyor sees the map growing.
- The surveyor gets a thorough knowledge of the area.
- Methods are fairly easily mastered.
- Office work merely entail tidying up the plan.

(Any 5 x 1) (5)

Copyright reserved

7.2

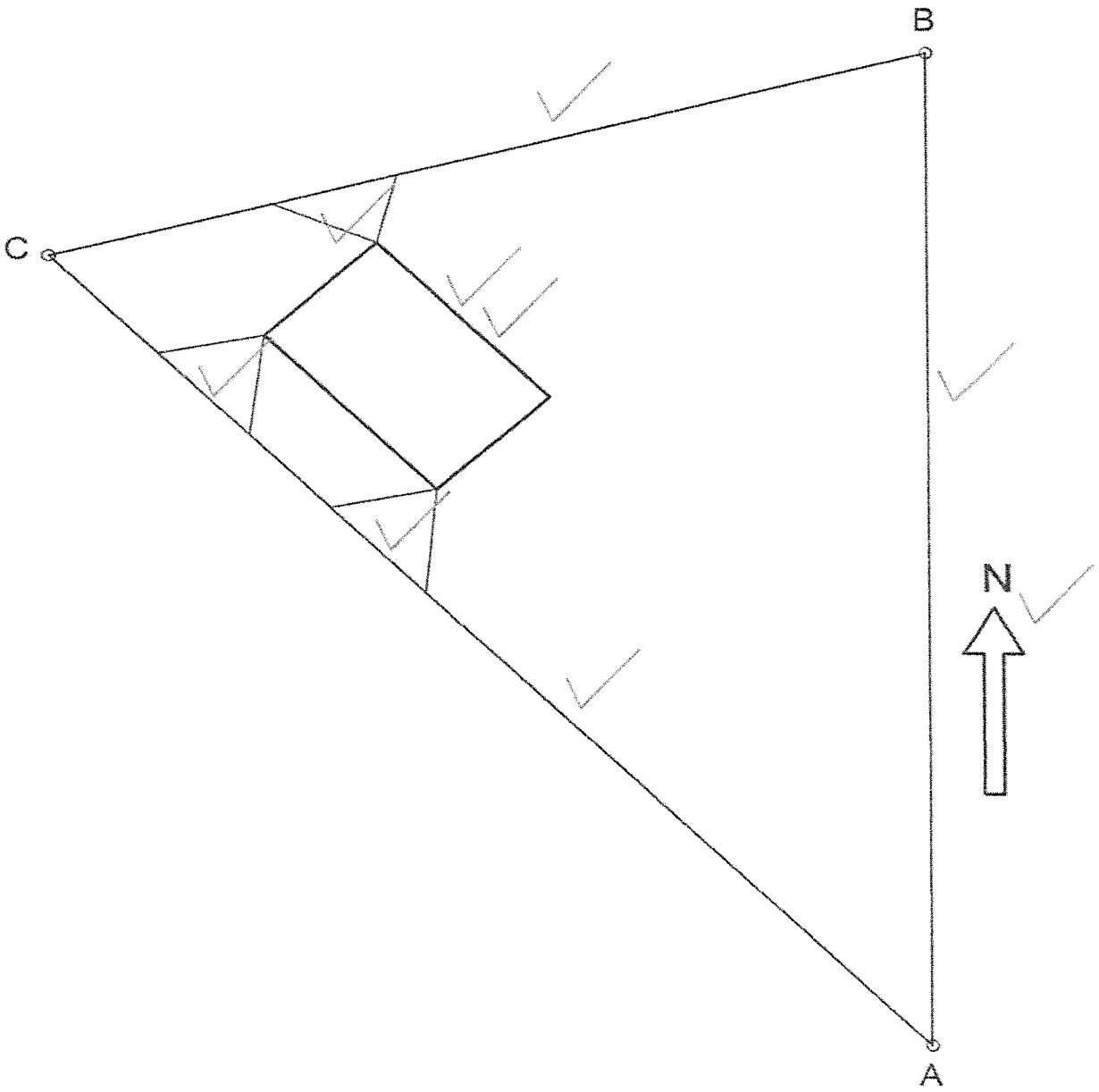


Correct plotting of AB = 1
BC = 1
CB = 1
Correct ties = 3x1
Building correct = 2x1
North = 1
Neatness = 1
Total **10**

(10)
**[15]**

**TOTAL: 100**

Copyright reserved