higher education & training

Department:
Higher Education and Training
REPUBLIC OF SOUTH AFRICA

T110(E)(A4)T
APRIL EXAMINATION

NATIONAL CERTIFICATE

BUILDING AND STRUCTURAL SURVEYING N4

(8060034)

4 April 2014 (Y-Paper)
13:00–16:00

Calculators may be used.

This question paper consists of 5 pages, 2 diagram sheets and 1 formula sheet.

ENGINEERING

Copyright reserved

DEPARTMENT OF HIGHER EDUCATION AND TRAINING
REPUBLIC OF SOUTH AFRICA
NATIONAL CERTIFICATE
BUILDING AND STRUCTURAL SURVEYING N4
TIME: 3 HOURS
MARKS: 100

INSTRUCTIONS AND INFORMATION

1. Answer ALL the questions.
2. Read ALL the questions carefully.
3. Number the answers according to the numbering system used in this question paper.
4. ALL the diagrams, sketches and drawings must be large and in good proportion, fully and clearly labelled and done in pencil.
5. Write neatly and legibly.

ENGINEERING

Copyright reserved

QUESTION 1

Define the following survey terms:

1.1 Cadastral surveying

1.2 Topographic surveying

1.3 Level surface

(3 × 2) **[6]**

QUESTION 2

2.1 Name the FOUR methods of measurement. (4)

2.2 Explain FIVE administrative and office work carried out by a surveyor. (10)
[14]

QUESTION 3

3.1 A map or plan is prepared for a particular purpose.

Name the FOUR factors influencing the accuracy of the map or plan. (4)

3.2 FIGURE 1 DIAGRAM SHEET 1 (attached), shows a plane table.

Write only the name of each component next to the question number (3.2.1–3.2.6) in the ANSWER BOOK. (6)

3.3 Calculate the area of a regular pentagon with sides 4 m long. (6)

3.4 Use a scale 1 cm = 100 m and plot the following coordinates as it would be done on the South African coordinate system:

	Y	X
A	- 750,0	+ 450,0
B	+ 380,0	+ 580,0

(4)
[20]

ENGINEERING

Copyright reserved

QUESTION 4

4.1 State FOUR advantages of using a chain. (4)

4.2 A positive correction of 0,012 m was found when measuring a certain distance with a steel tape. The standard temperature is 20EC and the temperature at the time of measurement is 25EC. The coefficient of linear expansion is 0,0000113 /EC.

Calculate the measured distance. (4)

4.3 A length of 75 m was measured horizontally in catenary. The measurement was done in three equal bays. The mass of the tape is 0,015 kg/m and the tension applied is 7 kgf.

Calculate the correct length. (6)

4.4 Make use of diagrams and explain the following methods of fixing a point:

4.4.1 Ties (3)

4.4.2 Resection (3)

4.5 State FIVE advantages of using electronic distance measurement. (5)
[25]

QUESTION 5

5.1 FIGURE 2, DIAGRAM SHEET 1 (attached) shows part of a levelling staff.

Give the readings at 5.1.1, 5.1.2 and 5.1.3. (3)

5.2 In what position should a staff be held in order to obtain accurate readings? (1)

5.3 DIAGRAM SHEET 2 (attached) shows five different types of instruments.

Write the name and use of each instrument next to each instrument number (5.3.1–5.3.5) in the ANSWER BOOK. (10)

5.4 What is meant by the term *collimation line*? (2)

5.5 Explain how you would use an Abney level and TWO ranging rods to measure the ground slope. (5)
[21]

ENGINEERING

Copyright reserved

QUESTION 6

6.1 Explain, with the aid of a diagram, the method of step-chaining. (8)

6.2 What is meant by the survey term *close chain surveying*? (2)

6.3 Indicate whether the following statements are TRUE or FALSE. Choose the answer and write only 'true' or 'false' next to the question number (6.3.1–6.3.4) in the ANSWER BOOK.

6.3.1 A tilting level is more accurate than a dumpy level.

6.3.2 The 'Y' coordinates are positive to the east of the central meridian.

6.3.3 A decrease on a staff reading indicates a rise.

6.3.4 A foresight is the first reading taken after the instrument has been set up.

(4 × 1) (4)

[14]

TOTAL: 100

ENGINEERING

Copyright reserved

DIAGRAM SHEET 1

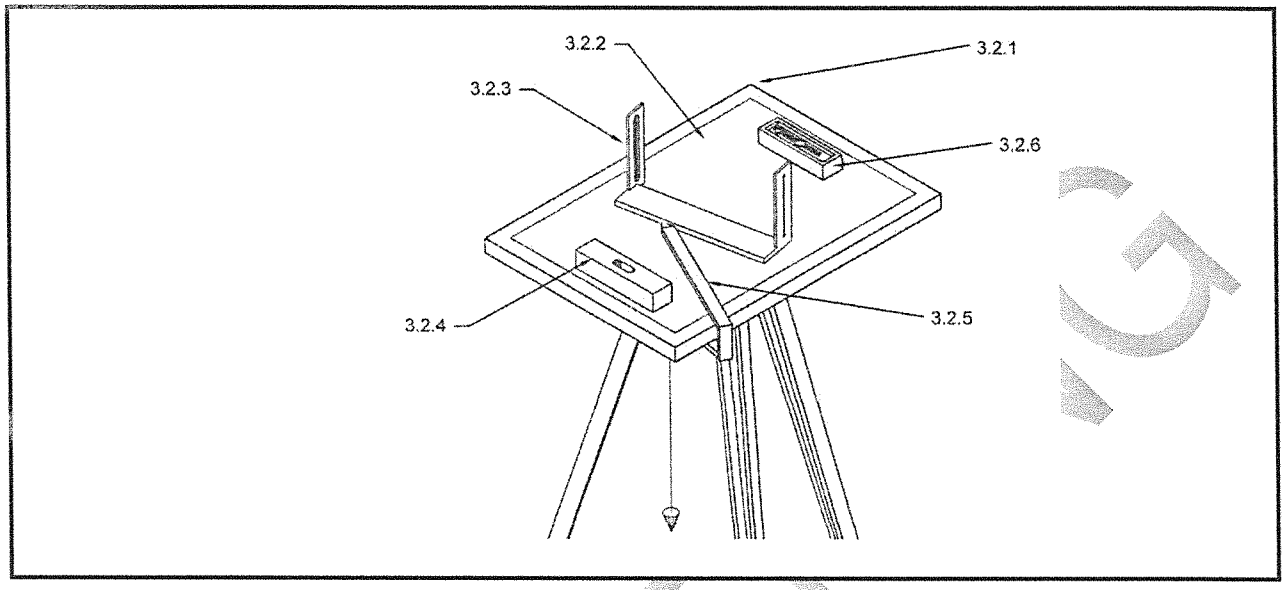

FIGURE 1

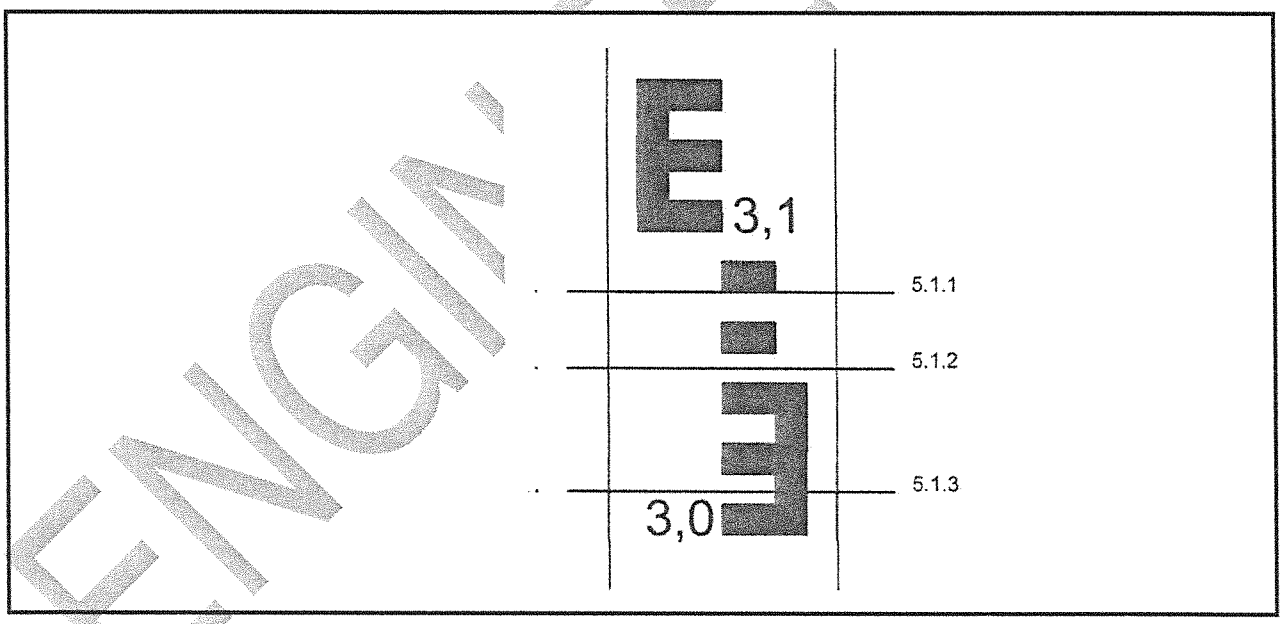

FIGURE 2

ENGINEERING

Copyright reserved

DIAGRAM SHEET 2

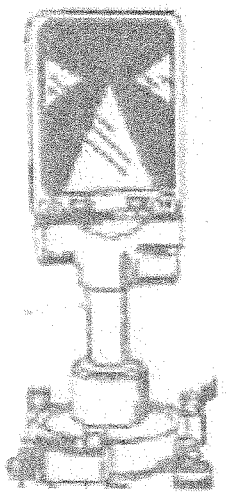

5.3.1

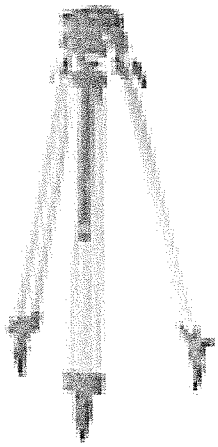

5.3.2

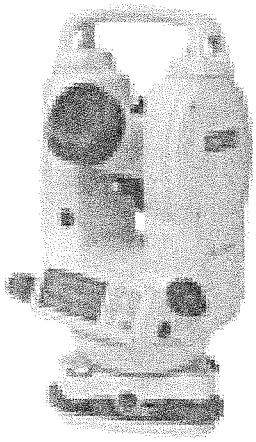

5.3.3

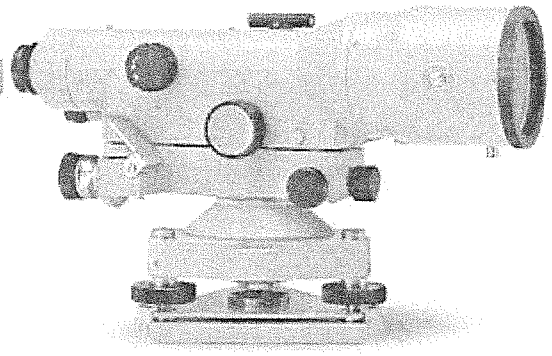

5.3.4



5.3.5

EXAMINER

Copyright reserved

BUILDING AND STRUCTURAL SURVEYING N4

FORMULA SHEET

Any other applicable formula may also be used.

1. $A = \frac{1}{2}b \times \perp h$

2. $A = \sqrt{s(s-a)(s-b)(s-c)}$, $s = \frac{a+b+c}{2}$

3. $A = \frac{(a+b) \times h}{2}$

4. $A = a \times h$

5. $A = \frac{d}{3}\left[(y_1 + y_n) + 2(y_3 + y_5 + \ldots + (y_{n-2})) + 4(y_2 + y_4 + \ldots + y_{n-1})\right]$

6. $A = d\left[\left(\frac{y_2 + y_n}{2}\right) + y_2 + y_3 + \ldots + y_{n-1}\right]$

7. $C = L \times e \times (t_m - t_s)$

8. $C = \frac{w^2 L^3}{24\,T^2}$

9. $C = L(1 - \cos\theta)$

10. $C = H(\sec\theta - 1)$

11. $C = \frac{L.H}{R}$

12. $A = \frac{1}{2}\,abSinC$

ENGINEERING

Copyright reserved

higher education & training

Department:
Higher Education and Training
REPUBLIC OF SOUTH AFRICA

MARKING GUIDELINE

NATIONAL CERTIFICATE

APRIL EXAMINATION

BUILDING AND STRUCTURAL SURVEYING N4

4 APRIL 2014

This marking guideline consists of 7 pages.

Copyright reserved

QUESTION 1

1.1 For preparation of plans showing legal boundaries

1.2 Representing upon a map the natural and artificial features of the earth's surface such as hills, rivers, valleys, lakes, roads. houses, etc

1.3 Is one at which every point in it is at right angles to the direction of gravity.

(3 × 2) **[6]**

QUESTION 2

2.1
- Horizontal distance
- Vertical distance
- Horizontal angle
- Vertical angle

(4 × 1) (4)

2.2
- All calculations and preparations are done that may be necessary to reduce the field measurements to a form suitable for plotting.
- The plotting, that is, drawing to scale of the measurements obtained.
- Obtaining any further required information from the plan by means of calculation or direct measurement.
- The surveyor liaises with the Engineer during construction of works.
- The surveyor supplies the engineer with the necessary data to enable him to design the proposed construction.
- He has to keep his instruments in good working condition

(Any 5 × 2) (10)
[14]

QUESTION 3

3.1
- Control
- Scale
- Speed and cost
- Skill and experience

(4 × 1) (4)

3.2
3.2.1 Plane table on tripod
3.2.2 Paper attached to board
3.2.3 Simple alidade
3.2.4 Spirit level
3.2.5 Plumbing fork
3.2.6 Box compass

(6 × 1) (6)

Copyright reserved

3.3

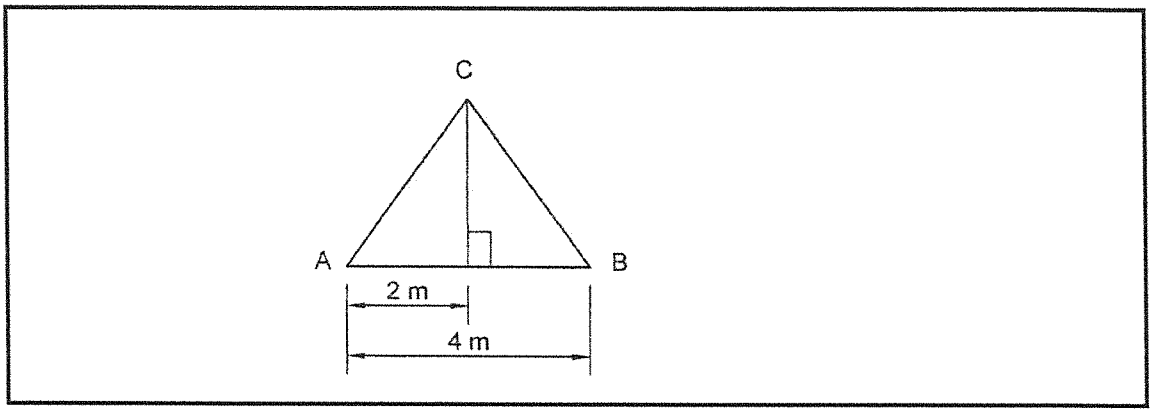

Central angle = 360/5 = 72° √

$\pi A = \pi B = \frac{180-72}{2} = 54° \surd$

$\text{Tan } 54E = \frac{\perp h}{2}$

$\perp h = 2 \tan 54° \surd$

Area of Δ = $^1/_2$ base x $\perp h$

= $^1/_2$ 4 x (2 tan 54 °)√

= 5,506 m^2 √

5 $\Delta^{'s}$ = 5 x 5, 506 m^2

= 27,53 m^2√

(6 × 1) (6)

Copyright reserved

3.4

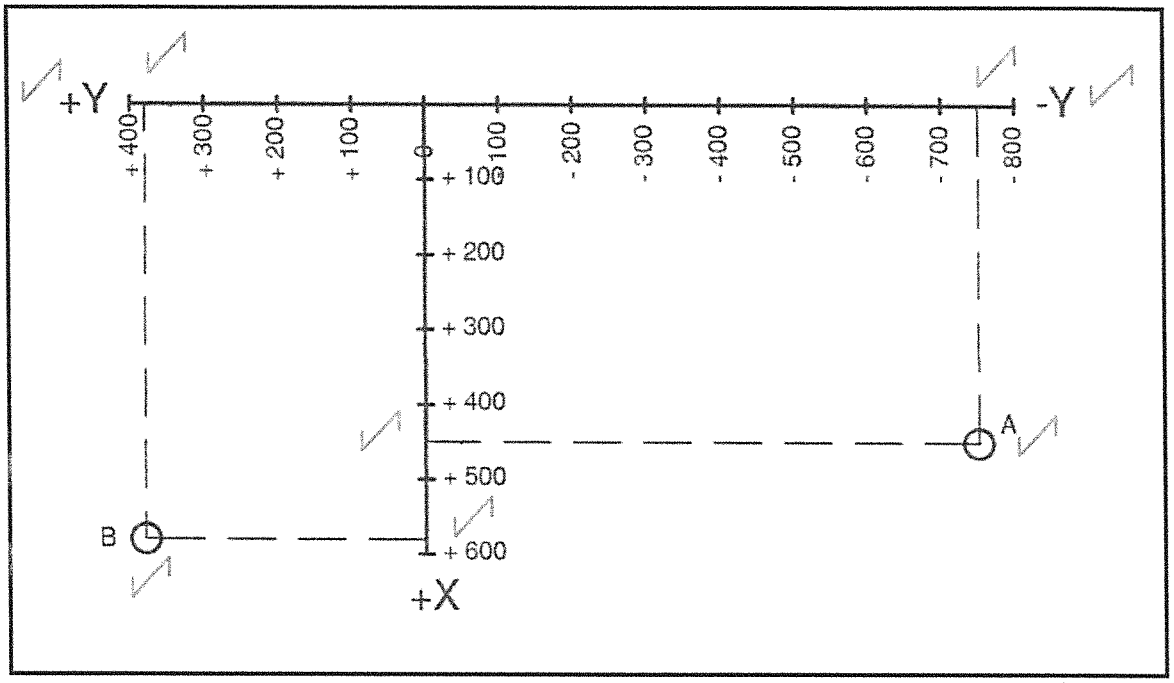

(½ × 8) (4)
[20]

QUESTION 4

4.1
- A chain is a robust instrument.
- The chain can be dragged around over the ground.
- The chain is easily read.
- The chain is easily cleaned.
- The chain is easily repaired.
- It can be read from both sides.

(4 × 1) (4)

4.2 $Ct = L\ x\ E\ x\ (Tm - Ts)\ \surd$

$+0,012 = L\ x\ 0,0000113\ x\ (25 - 20)\ \surd$

$$L = \frac{+0,012}{0,0000113\,x\,5}\ \surd$$

$L = 212,389\,m\ \surd$ (4)

Copyright reserved

4.3 $Csl = \frac{w^2 l^3}{24t^2}$

1 bay = $^{75}/_{3}$ = 25 m

$Csl = \frac{(0,015)^2 25^3}{24(7)^2}$ √

$Csl = 0,003\,m$ √

Correct distance 1 bay = 25 – 0,003 √

= 24,997 m√

Correct total distance = 3 x 24, 997 m√

= 74, 991 m√

(6 × 1) (6)

4.1 4.4.1

Sketch √

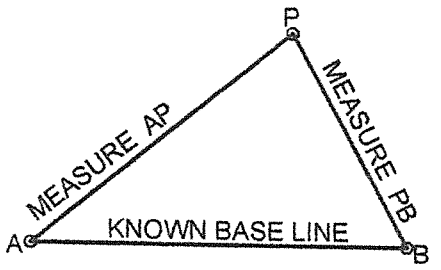

A and B are the known points.
Measure length AP.√
Measure length PB.√

(3 × 1) (3)

4.4.2

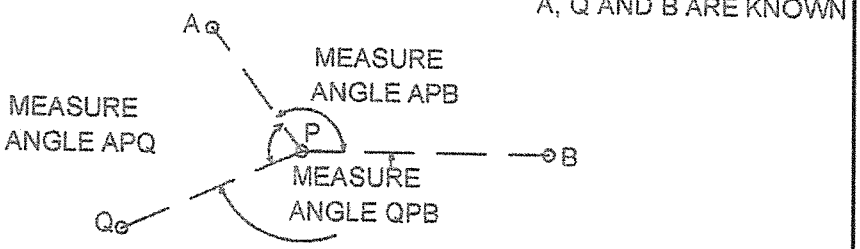

Sketch√

Measure angle APQ√
Measure angle APB√
Measure angle BPQ

Any of the two angles plus the sketch (3)

Copyright reserved

4.5
- Setting out precise distances.
- Setting out can be performed from a single fixed point.
- Setting out operations are simplified - uneven ground is not an obstruction.
- Traverse distances are measured with a great degree of accuracy.
- Measuring over a ravine or river for bridge building is accurately performed.
- In urban areas where traffic would interfere with tape measurements an EDM presents no hold-ups
- A reduction in the crew size required for most measurements
- The ability to establish better control for construction works.

(Any 5 × 1) (5)
[25]

QUESTION 5

5.1
5.1.1 3,08
5.1.2 3,055
5.1.3 3,015

(3 × 1) (3)

5.2 In a vertical position. (1)

5.3
5.3.1 Target√ Used with tripod to elevate hidden or low survey points.√
5.3.2 Tripod√ Used for mounting of instruments.√
5.3.3 Theodolite√ For setting out of angles√
5.3.4 Tilting level√ For levelling operations√
5.3.5 Spring balance√ To measure the tension applied to the tape√

(5 × 2) (10)

5.4 The line joining the intersection of the cross hairs and the optical centre of the object glass. (2)

5.5 The instrument is held against a ranging rod and aimed towards a distant rod√ so that the sight line is parallel with the ground.√

Turn the milled knob√ so that the bubble is centered√ against the cross-wire.

The index arm will point to the vertical angle and the angle is noted.√ (5)
[21]

Copyright reserved

QUESTION 6

6.1

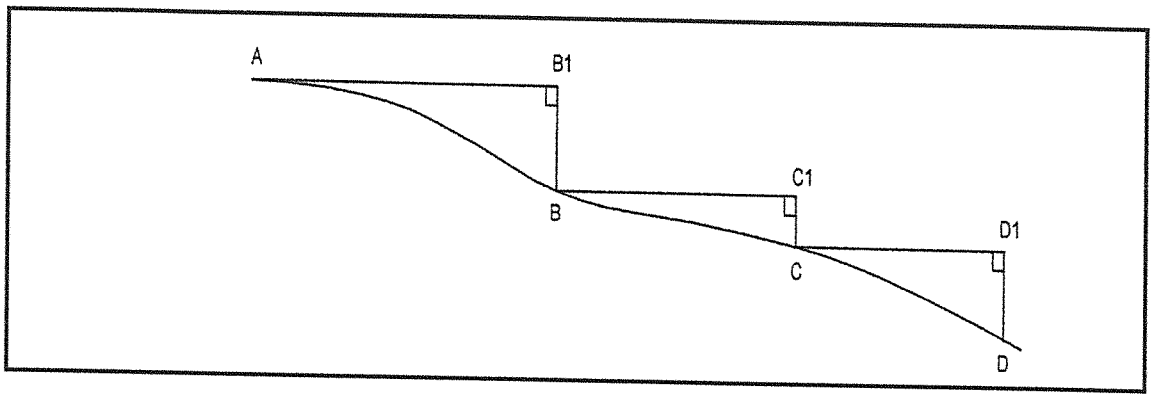

Sketch 1√

The method is as follows
Three men are required, a follower, a leader and an observer.√
The follower keeps the end of the tape or chain at AA@ and lines the leader who keeps the other end of the tape at a suitable distance at AB1@.√
The observer lines the tape horizontally and once horizontal, the leader drops a plumb bob from AB1'to AB@ on the ground.√
The observer will note the measurement in his book.√
The follower then moves the tape end to AB@ and line the leader who drops from the observed horizontal tape a plumb bob from 'AC1' o meet the ground at AC@.√
The observer again books this measurement.√
This process is repeated until the required distance is obtained.√

The summation of the distances measured will produce the required horizontal distance.√

(8 × 1) (8)

6.2 Is when the survey is done from a known point to another known point√ or from a particular point and back to that same point.√? (2)

6.3
6.3.1 True
6.3.2 False
6.3.3 True
6.3.4 False

(4 × 1) (4)
[14]

TOTAAL: 100

Copyright reserved