higher education & training

Department:
Higher Education and Training
REPUBLIC OF SOUTH AFRICA

MARKING GUIDELINE

NATIONAL CERTIFICATE

BUILDING AND STRUCTURAL CONSTRUCTION N6

29 JULY 2021

This marking guideline consists of 10 pages.

Copyright reserved

NOTE TO MARKERS:

- This marking guideline conforms to SANS 10 100 (2000) Part 1 Design (The structural use of concrete) and SANS 0162 (1984) (The structural use of steel).
- Alternative answers must be considered. Use your own discretion
- The marker must check the candidate's method of obtaining the answer.
- Subtract TWO marks per question where references and clauses are not stated.

QUESTION 1

Given information:

406 × 140 × 38,6 kg/m I-section parallel flange:	140 × 60 × 16 kg/m channel section:
Ixx = 124,1 × 10^{-6} m^4	Iyy = 0,6249 10^{-6} m^4
Area = 4,923 10^{-3} m^2	Area = 2,037 × 10^{-3} m^2
$\frac{H}{2} = \frac{397,3}{2}$ = 198,65 mm	Ay = 17,5 mm

Total area = 4,923 × 10^{-3} m^2 + 2,037 × 10^{-3} m^2
Total area = 6,96 × 10^{-3} m^2✓ (1)

1.1 Calculate neutral axis using area moments.
6,96 × 10^{-3} m^2 × Y1
= (4,923 × 10^{-3} m^2 × 0,25865) + (2,037 × 10^{-3} m^2 × 0,0425)
1,27 × 10^{-3} + 0,087 × 10^{-3}✓✓
$Y_1 = \frac{1,36\ x\ 10^{-3}\ m^2}{9,96\ x\ 10^{-3}\ m^2}$ ✓
Y_1 = 0,19539 m
Y_1 = 195,39 mm✓ (4)

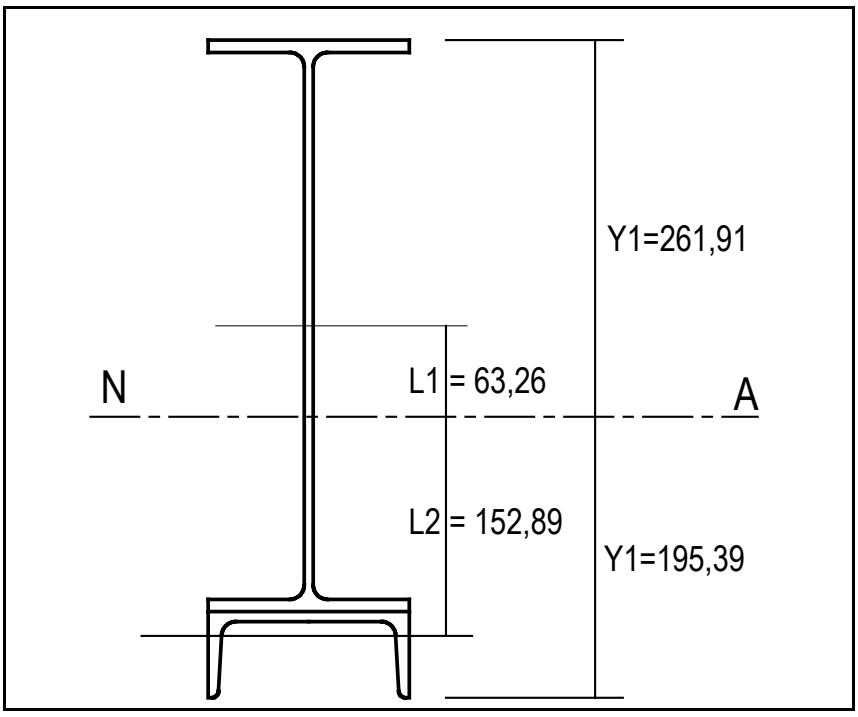

1.1 Calculate second moment of area (Ixx total).

$I_{xx\ tot} = (Ixx\ beam + \ al^2) + (Iyy\ channel + al^2)$

$I_{xx\ beam}$:

$(124{,}1 \times 10^{-6} + 4{,}923 \times 10^{-3} \times 0{,}06326^2)$

$(124{,}1 \times 10^{-6} + 19{,}7 \times 10^{-6}) = \underline{143{,}8 \times 10^{-6}\ m^4}$ ✓✓

$I_{yy\ channel}$:

$(0{,}6249 \times 10^{-6} + 2{,}037 \times 10^{-3} \times 0{,}15239^2)$

$(124{,}1 \times 10^{-6} + 47{,}3 \times 10^{-6}) = \underline{47{,}93 \times 10^{-6}\ m^4}$ ✓✓

Ixx total = 191,73 × $\underline{10^{-6}\ m^4}$ ✓ (5)

1.2 Calculate bending moment maximum (bending stress = 170 MPa).

$\frac{M}{I} = \frac{f}{y}$ where M = $\frac{I\ x\ f}{y}$

$\mathrm{BM_{max}} = \frac{191{,}73\ x\ 10^6\ \ x\ \ 170}{195{,}39}$ ✓

$\mathrm{BM_{max}} = 166{,}82$ kNm✓ (2)

1.3 Self-weight of beam:

Weight of beam: 16 + 38,6 kg/m × 9,81 × 10^{-3} = 0,536 kN/m✓ (1)

Take moments about RL to find 'W'.

BM = (W x 2,3) + (0,536 x 2,3 x 1,15)✓

BM = 2,3 W + 1,418

Equate to BM from above.

166,82 = 2,3 W + 1,418✓

W = $\frac{166{,}82 - 1{,}418}{2{,}3}$

W = 71,91 kN✓

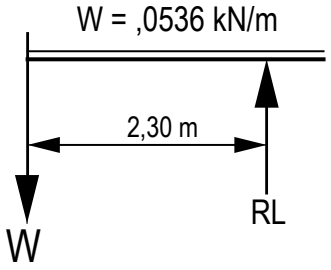

(3)

[16]

QUESTION 2

All references are taken from SANS 10100-1 (2000).

2	Table 2
Fcu = 20 MPa	(Cl. 4.1.5.1)
Fy = 450 MPa	Table 3
Span = 6,78 m	(Cl. 4.1.5.2)
Density of concrete = 2 400 kg/m^3	

Determine effective depth of beam.

Effective depth = span/16

Eff d = 6 780/16✓ Table 10

Eff d = 423,75 mm✓ (Cl. 4.3.6.2.1) (2)

Determine overall depth.
Assume Y25 main steel and Y10 binders.
Assume cover of 25 mm.
Overall depth = 423,75 + $\frac{25}{2}$ + 10 + 25✓
Overall depth = 471,25 mm (use overall depth = 475 mm) (1)

Loading on beam:
Design dead loads:
Design dead load = volume x density × 9,81 × 10^{-3} × 1,2 Gn
= 0,475 × 0,295 × 1 × 2 400 kg/m³ × 9,81 × 10^{-3} × 1,2 Gn✓ (Cl. 4.2.2.1)
Design dead load = 3,96 kN/m✓

Design imposed loads:
UDL = 5,2 kN/m × 1,6 Qn = 8,32 kN/m✓

Point load = 21 × 1,6 Qn = 33,6 kN/m✓ (Cl. 4.2.2.1) (4)

Calculate bending moment maximum.
$BM_{max} = \frac{WL^2}{8} + \frac{WL^2}{8} + \frac{WL}{4}$
$= \frac{3,96\ x\ 6,78^2}{8} + \frac{8,32\ x\ 6,78^2}{8} + \frac{33,6\ x\ 6,78}{4}$ ✓
= 22,75 + 47,81 + 56,952
BM_{max} = 127,512 kNm✓ (2)

Calculate value of 'K'.
$K = \frac{BM}{fcu\ b\ d^2}$ (Cl. 4.3.3.4.1)

$K = \frac{127,512\ x\ 10^6}{20\ x\ 295\ x\ 423,75^2}$ ✓

K = 0,12 < K^1 = 0,156✓
Provide tension reinforcement only. (2)

Calculate distance of lever arm (Z).
$Z = d\left\{0,5 + \sqrt{0,25 - \frac{k}{0,9}}\right\} \leq 0,95$ d (Cl. 4.3.3.4.1)

Z =423,75 $\left\{0,5 + \sqrt{0,25 - \frac{0,12}{0,9}}\right\} \leq 0,95 \times 423,75$ mm✓
Z =423,75 $\{0,84\}$
$Z = 355,95$ mm < 402,75 mm✓ (2)

Calculate tension reinforcement.
$As = \frac{M}{0,87\ x\ fy\ x\ z}$ (Cl. 4.3.3.4.1)
$As = \frac{127,512\ x\ 10^6}{0,87\ x\ 450\ x\ 355,95}$✓
As = 915 mm^2✓
Use 3Y20 (As = 942 mm^2)✓ (3)

Check for minimum main reinforcement.

$\frac{100\ As}{Ac}$ = 0,45

$\frac{100\ x\ 942}{295\ x\ 475}$ = 0,67✓ Table 23 (Cl. 4.11.4)

0,67 > 0,45✓

The reinforcement is sufficient. (2)

Check maximum reinforcement.

$4\%\ of\ Ac$ (Cl. 4.11.5.1)

4% × 475 × 295✓

= 5 605 mm^2

5 605 mm^2 > 942 mm^2✓ (2)

[20]

QUESTION 3

All references are taken from SANS 10100-1 (2000).

Fcu = 25 MPa Table 2 (Cl. 4.1.5.1)

Fy = 250 MPa Table 3 (Cl. 4.1.5.2)

Width = 1,35 metres

Density of reinforced concrete = 2 425 kg/m³

Calculate length of slope.

Length of slope = $\sqrt{2\ 250^2 + 1\ 625^2}$✓

Length of slope = 2,775 mm (2, 775 m) ✓ (2)

Load calculations:

Waist:

W = volume × density × g.a x 10^{-3}

W = 2,775 × 1,35 × 0,12 × 2 425 kg/m³ x 9,81 × 10^{-3} × 1,2 Gn✓ (Cl. 4.2.2.1)

W = 12,83 kN✓

Treads or steps:

W = volume × density × g.a × 9,81 × 10^{-3}

W = ½bh x width × density × g.a x 9,81 × 10^{-3}

W = ½ × 0,215 × 1,625 × 1,35 x 2 425 kg/m³ × 9,81 × 10^{-3} × 1,2 Gn✓ (Cl. 4.2.2.1)

W = 6,73 kN✓ (4)

Design imposed load:

1,6 Qn (10,5 kN/m² × 1,35 m × 2,25 m) = 51 kN✓ (Cl. 4.2.2.1) (1)

Calculate bending moment maximum.

$BM_{max} = \frac{WL}{10} + \frac{WL}{10}$

$BM_{max} = \frac{(12{,}83 + 6{,}73)\ x\ 2{,}25}{10} + \frac{51\ x\ 2{,}25}{10}$ ✓

BM_{max} = 4,4 + 11,48

BM_{max} = 15,88 kNm✓ (2)

Calculate value of 'K'.
K = $\frac{BM}{fcu\ b\ d^2}$ (Cl. 4.3.3.4.1)

K = $\frac{15{,}88\ x\ 10^6}{25\ x\ 1\ 350\ x\ 90^2}$ ✓
K = 0,058 < K^1 = 0,156✓
Only tension reinforcement will be required.

Let eff depth (d)
= 120 – 30 cover
= 90 mm (2)

Calculate distance of lever arm (Z).
$Z = d\left\{0{,}5 + \sqrt{0{,}25 - \frac{K}{0{,}9}}\right\} \leq 0{,}95d$ (Cl. 4.3.3.4.1)

$Z = 90\left\{0{,}5 + \sqrt{0{,}25 - \frac{0{,}058}{0{,}9}}\right\} \leq 0{,}95 \times 90$✓
Z = 90(0,93) ≤ 0,95 × 90
Z = 83,77 mm < 85,5 mm✓
Use Z = 83,77 mm (least).✓ (3)

Calculate tension reinforcement.
As = $\frac{M}{0{,}87\ fy\ z}$ (Cl. 4.3.3.4.1)

As = $\frac{15{,}88\ x\ 10^6}{0{,}87x\ 250\ x\ 83{,}77}$✓

As = 871,57 mm²✓
Use R12 bars @ 125 c/c (As = 905 mm²).✓ (3)

Determine secondary reinforcement.
$\frac{100\ AS}{AC}$ = 0,24✓ Table 23
(Cl. 4.11.4.3)
As = $\frac{0{,}24\ x\ AC}{100}$
As = $\frac{0{,}24\ x\ 1\ 350\ x\ 120}{100}$✓
As = 388 mm²
Use R8 bars @ 125 c/c (As = 402 mm²).✓ (3)
[20]

QUESTION 4

4.1 The effective length of each fillet: 162 mm (they have return side fillets)✓

Total effective length: 2 × 162 mm = 324 mm✓

Throat thickness: Sin45º × 10 = 7,071 mm✓

Total throat area: 324 mm × 7,071 = 2 291 mm^2✓
Stress × area
Safe load: 130 N/mm^2 × 2 291 mm^2✓
= 297,83 kN✓ (6)

4.2 Calculate effective area of bolt.

Eff area = $\frac{\pi\ (\theta - 0{,}9382\ P)^2}{4}$ (SABS 0162, Cl. 10.5.1)

= $\frac{\pi\ (10 - 0{,}9382\ x\ 1{,}5)^2}{4}$ ✓

Eff area = 57,989 mm^2✓ (2)

Number of bolts required:
Force = area x shear stress × number

Number of bolts = $\frac{25\ x\ 10^3}{57{,}989\ x\ 100}$ ✓

N = 4,3 bolts (use 5 M10 bolts)✓ (2)

[10]

QUESTION 5

5.1 Determine reactions.
Take moments about RL.
RR x 11 = (27 × 5,5 × 8,25) + (57 × 5,5) + (17 × 5,5 × 2,75)✓
= 1 225,125 + 313,5 + 257,125

RR = $\frac{1\ 795{,}75}{11}$

RR = 163, 25 kN✓
Take moments about RR.
RR x 11 = (17 × 5,5 × 8,25) + (57 × 5,5) + (27 × 5,5 × 2,75)✓
= 771,375 + 313,5 + 408,375

RL = $\frac{1\ 493{,}25}{11}$

RL = 135,75 kN✓ (4)

5.2 Calculate bending moment at centre.
(135,75 × 5,5) – (17 × 5,5 × 2,75)✓
= 746,625 – 257,125
BM_{max} = 489, 5 Knm✓ (2)

Calculate section modulus Z. Bending stress = 166 MPa

$\frac{M}{I} = \frac{f}{y}$ where Z = $\frac{M}{f}$

$Z = \frac{489{,}5\ x\ 10^6}{166}$ ✓

Z = 2 948,8 × 10^{-6} m^3✓
Select 610 × 229 × 125 kg/m^3 ✓
(Ze = 3 219 × 10^{-3} m^3) (3)

Check whether beam is adequate.
Self-weight of chosen beam: 125 kg/m^3 × 9,81 × 10^{-3}
Self-weight = 1,23 kN/m

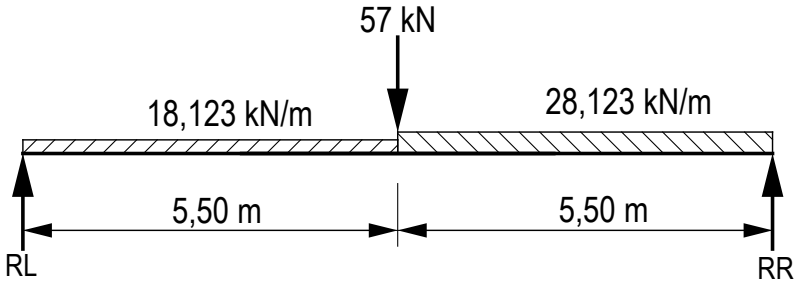

5.3 Recalculate reactions.
Take moments about RL.
RR x 11 = (28,123 × 5,5 × 8,25) + (57 × 5,5) + (18,123 × 5,5 × 2,75) ✓
= 1 276,1 + 313,5 + 274,1
RR = $\frac{1\,863,75}{11}$
RR = 169,4 kN✓
Take moments about RR.
RR × 11 = (18,123 × 5,5 × 8,25) + (57 × 5,5) + (28,123 × 5,5 × 2,75)
= 822,3 + 313,5 + 425,4
RL = $\frac{1\,561,2}{11}$
RL = 141,9 kN✓ (3)

Adjust bending moment at centre.
(141,9 × 5,5) - (18,123 × 5,5 × 2,75)
= 780,45 - 274,11
BM_{max} = 506,3 kNm✓ (1)

Calculate section modulus Z. Bending stress = 166 MPa
$\frac{M}{I} = \frac{f}{y}$ where Z = $\frac{M}{f}$
$Z = \frac{506,3\ x\ 10^6}{166}$

Z = 3 050 × 10^{-6} m^3✓
The chosen beam is adequate.
3 050 × 10^{-6} m^3 < Ze = 3 219 × 10^{-3} m^3✓ (2)
[15]

QUESTION 6

6.1
- Leaving the formwork in place
- Covering the concrete with plastic sheeting
- Applying a membrane-forming compound (Any 2 × 1) (2)

6.2
- Blast furnace
- Bessemer process
- Electric furnace
- Open-hearth furnace (Any 2 × 1) (2)

[4]

QUESTION 7

All references are taken from SANS 10100-1 (2000).

Fcu = 25 MPa Table 2 (Cl. 4.1.5.1)
Fy = 450 MPa Table 3 (Cl. 4.1.5.2)
Span = 9,50 metres (Cl. 4.3.1.2)

7.1 Calculate lever arm (Z).

$$Z = d\left\{0{,}5 + \sqrt{0{,}25 - \frac{K^1}{0{,}9}}\right\}$$ ✓

$$Z = 585\left\{0{,}5 + \sqrt{0{,}25 - \frac{0{,}156}{0{,}9}}\right\}$$

Z = 585(0,777)

Z = 454,55 mm✓ (2)

7.2 Calculate position of neutral axis. (Cl. 4.3.3.4)

$$X = \left(\frac{d-z}{0{,}45}\right)$$

$$X = \left(\frac{585-454{,}55}{0{,}45}\right)$$ ✓

X = 290 mm > 160 mm✓
The neutral axis lies *below* the flange.✓ (3)

7.3 The total design load:
Design load = 1,2 Gn + 1,6 Qn (Cl. 4.2.2.1)
DL = 1,2 (11,2 kN/m² × 1) + 1,6 (4,35 kN/m² × 1✓
DL = 20,40 kN/m✓ (2)

7.4 Calculate bending moment maximum.

$BM_{max} = \frac{WL^2}{8}$

$BM_{max} = \frac{20{,}4\ x\ 8{,}5^2}{8}$ ✓

BM_{max} = 184,24 kNm✓ (2)

7.5 Calculate tension reinforcement.

$As = \frac{M+0,1\ fcu\ b_w\ d\ (0,45d-\ h_{f)}}{0,87\ fy\ (d-\ 0,5h_{f)}}$ ✓✓ (CL. 4.3.3.4.2)

$As = \frac{184,24\ x\ 10^6\ +(0,1\ x\ 25\ x\ 300\ x\ 585)\ (\ 0,45\ x\ 585-160)}{0,87\ x\ 450\ (585-\ 0,5\ x\ 160)}$

$As = \frac{122,83\ x\ 10^6+(438\ 750)\ (103,25)}{391,5\ x\ 505}$ ✓

$As = \frac{165\ 300\ 937,5}{197\ 707,5}$ ✓

As = 836,09 mm²✓

Use 3Y20 bars✓ (As = 943 mm²)✓ (6)

NOTE:
The NA lies *below* the flange.

[15]

TOTAL: 100

Copyright reserved