higher education & training

Department:
Higher Education and Training
REPUBLIC OF SOUTH AFRICA

T150**(E)**(J31)T

NATIONAL CERTIFICATE

BUILDING AND STRUCTURAL CONSTRUCTION N6

(8060026)

31 July 2019 (X-Paper)
09:00–13:00

OPEN-BOOK EXAMINATION

REQUIREMENTS: Hot-rolled structural steel sections (red book) (BOE 8/6)

Calculators, personal notes and textbooks may be used.

This question paper consists of 5 pages and 3 schedules.

DEPARTMENT OF HIGHER EDUCATION AND TRAINING
REPUBLIC OF SOUTH AFRICA

NATIONAL CERTIFICATE
BUILDING AND STRUCTURAL CONSTRUCTION N6
TIME: 4 HOURS
MARKS: 100

INSTRUCTIONS AND INFORMATION

1. Answer ALL the questions.
2. Read ALL the questions carefully.
3. Number the answers according to the numbering system used in this question paper.
4. Start each question on a NEW page.
5. Draw a line across the page at the end of each answer.
6. ALL calculations must conform to the relevant SABS/SANS Codes of Practice.
7. Indicate ALL relevant code/clause references.
8. Complement answers with neat sketches.
9. Use the attached SCHEDULES A, B and C to assist with answers.
10. Write neatly and legibly.

QUESTION 1

A simply supported reinforced concrete beam must be cast over a wide opening for a roll-up metal garage door. The effective span for the opening is 9 metres. The overall dimensions is 475 mm deep and 330 mm wide and must support the following loads:

- A uniformly distributed live load of 8 kN/m
- A 55 kN point load 3,5 metres from the right-end support

Use the following specifications:

- Grade 25 MPa concrete
- High-yield tensile reinforcement
- Density of the concrete = 2 425 kg/m³
- Do NOT insert any reinforcement.
- Consider the self-weight of the reinforced concrete beam.

1.1 Calculate the design loads for the given beam. (4)

1.2 Calculate the reactions RL and RR of the beam. (2)

1.3 Draw a neat sketch of the shear-force diagram. (2)

1.4 Calculate and draw a neat sketch of the bending-moment diagram. (4)

1.5 Calculate the value of K to determine if compression reinforcement is required. (3)

[15]

QUESTION 2

A hollow circular steel column must be used to carry the eave section of a roof. The external cross-sectional diameter of the column is 100 mm with a wall thickness of 3 mm. The overall height of the column is 3,25 metres.

Calculate the load that the column will support if it is effectively held in position at both ends, but not restrained against rotation. **[15]**

QUESTION 3

FIGURE 1 shows a sectional view of a 140 × 60 × 16 kg/m channel iron connected to the bottom flange of a 178 × 102 × 21,5 kg/m steel beam to form a compound steel beam. The beam will span over a distance of 8,75 m and is simply supported on two reactions.

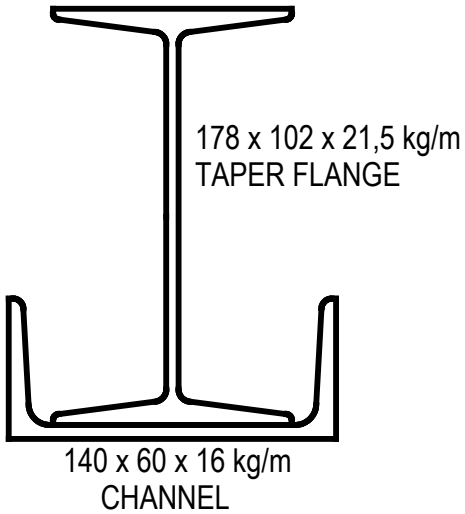

FIGURE 1

Calculate the central point load which the compound beam must support. The self-weight of the compound beam must be ignored. The maximum bending stress must not exceed 163 MPa. **[20]**

QUESTION 4

A 375 mm × 375 mm square RC column is required to support a load of 421,57 kN.

Calculate the required longitudinal compression reinforcement and binders for the short axially-loaded reinforced concrete column. **[10]**

QUESTION 5

FIGURE 2 shows a fillet welding joint with open ends and a leg size of 8 mm. The length of the weld is 220 with a maximum stress of 130 MPa.

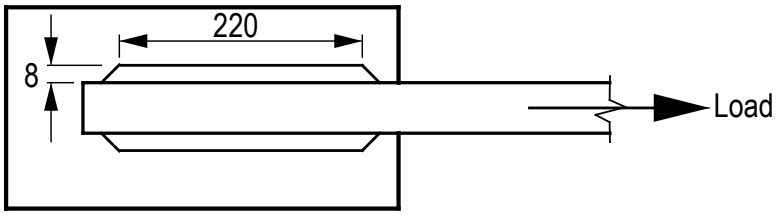

FIGURE 2

Calculate the maximum load. **[8]**

QUESTION 6

A single rolled steel angle (RSA) must be fixed to a gusset plate using M16 bolts. The maximum tensile force in the tie is 110 kN.

Select a suitable equal-leg rolled steel angle and show by means of calculations that the angle will be able to withstand the given load. **[10]**

QUESTION 7

A one-directional, simply supported, reinforced concrete slab has an effective span of 5,25 metres and supports a live load of 7,5 kN/m². Grade 25 MPa concrete with mild-steel reinforcement was used to construct the slab. The density of the concrete must be taken as 2 450 kg/m³.

Calculate the suitable tension and secondary reinforcement for the given slab. The self-weight of the slab must be considered in the calculations. **[22]**

TOTAL: 100

SCHEDULE A

CROSS-SECTIONAL AREA OF REINFORCEMENT RODS FOR BEAMS AND COLUMNS										
Number of rods	**Rod diameter (mm)**									
	Ø6	Ø8	Ø10	Ø12	Ø16	Ø20	Ø25	Ø32	Ø40	Ø50
1	28,3	50,3	78,5	113,1	201,1	314,2	490,9	804,2	1 256,6	1 963,5
2	57	101	157	226	402	628	982	1 608	2 513	3 927
3	85	151	236	339	603	943	1 473	2 413	3 770	5 891
4	113	201	314	452	804	1 257	1 964	3 217	5 026	7 854
5	141	251	393	566	1 006	1 571	2 455	4 021	6 283	9 818
6	170	302	471	679	1 207	1 885	2 945	4 825	7 540	11 781
7	198	352	550	792	1 408	2 199	3 436	5 629	8 796	13 745
8	226	402	628	905	1 609	2 514	3 927	6 434	10 053	15 708
9	255	453	707	1 018	1 810	2 828	4 418	7 238	11 309	17 672
10	283	503	785	1 131	2 011	3 142	4 909	8 042	12 566	19 635
11	311	553	864	1 244	2 212	3 456	5 400	8 846	13 823	21 599
12	339	603	942	1 357	2 413	3 770	5 891	9 650	15 079	23 562
	Typical secondary reinforcement			**Typical main reinforcement**						

SCHEDULE B

CROSS-SECTIONAL AREA OF REINFORCEMENT RODS PER METRE WIDTH FOR SLABS AND STAIRCASES										
Spacing of rods centre to centre	**Rod diameter (mm)**									
	Ø6	Ø8	Ø10	Ø12	Ø16	Ø20	Ø25	Ø32	Ø40	Ø50
50	566	1 005	1 571	2 262	4 021	6 283	9 817	16 085	25 133	39 270
75	377	670	1 048	1 508	2 681	4 189	6 545	10 723	16 755	26 180
100	283	503	785	1 131	2 011	3 142	4 909	8 042	12 566	19 635
125	226	402	628	905	1 608	2 513	3 927	6 434	10 053	15 708
150	188	335	524	754	1 340	2 094	3 272	5 362	8 378	13 090
175	162	387	449	646	1 149	1 795	2 805	4 596	7 181	11 220
200	141	251	393	565	1 005	1 571	2 454	4 021	6 283	9 817
250	113	201	314	452	804	1 257	1 963	3 217	5 027	7 854
300	94	168	262	377	670	1 047	1 636	2 681	4 189	6 545
350	81	144	224	323	574	898	1 402	2 298	3 590	5 610
400	71	125	196	283	503	786	1 227	2 011	3 142	4 909
500	57	101	157	226	402	620	982	1 608	2 513	3 927
	Typical secondary reinforcement				**Typical main reinforcement**					

SCHEDULE C

ISOMETRIC BLACK HEXAGON BOLTS AND NUTS									
Normal size and thread diameter	DIMENSIONS IN MILLIMETRE								
	Pitch of thread coarse pitch series	Maximum width of head and nut		Maximum height of head		Maximum thickness of nut		Tensile stress area in mm²	Minimum distance between centres
		Across flats	Across corners	Black	Face on underside	Black	Face one side		
M6	1	10,00	11,5	4,375	4,25	5,375	5	20,1	15
M8	1,25	13,00	15,0	5,875	5,74	6,875	6,5	36,6	20
M10	1,5	17,00	19,6	7,45	7,29	8,45	8,	58,0	25
M12	1,75	19,00	21,9	8,45	8,29	10,45	10	84,3	30
M16	2	24,00	27,7	10,45	10,29	13,45	13	157	40
M20	2,5	30,00	34,6	13,90	13,35	16,55	16	245	50
M22	2,5	32,00	36,9	14,90	14,35	18,55	18	303	55
M24	3	35,00	41,6	15,90	15,35	19,65	19	353	60
M27	3	41,00	47,3	17,90	17,35	22,65	22	459	67,5
M30	3,5	46,00	53,1	20,05	19,42	24,65	24	561	75
M33	3,5	50,00	57,7	22,05	21,42	26,65	26	694	82,5
M36	4	55,00	63,5	25,05	23,42	29,65	29	817	90
M39	4	60,00	69,3	26,05	25,42	31,80	31	976	97,5
M42	4,5	65,00	75,1	27,05	26,42	34,80	34	1 120	105
M45	4,5	70,00	80,8	29,05	28,42	36,80	36	1 300	112,5
M48	5,0	75,00	86,6	31,05	30,42	38,80	38	1 470	120
M52	5,0	80,00	92,4	34,25	33,42	42,80	42	1 760	130
M56	5,5	85,00	98,1	36,25	35,50	45,80	45	2 030	140