higher education & training

Department:
Higher Education and Training
REPUBLIC OF SOUTH AFRICA

MARKING GUIDELINE

NATIONAL CERTIFICATE

NOVEMBER EXAMINATION

BUILDING AND STRUCTURAL CONSTRUCTION N5

21 NOVEMBER 2016

This marking guideline consists of 8 pages.

Copyright reserved

QUESTION 1

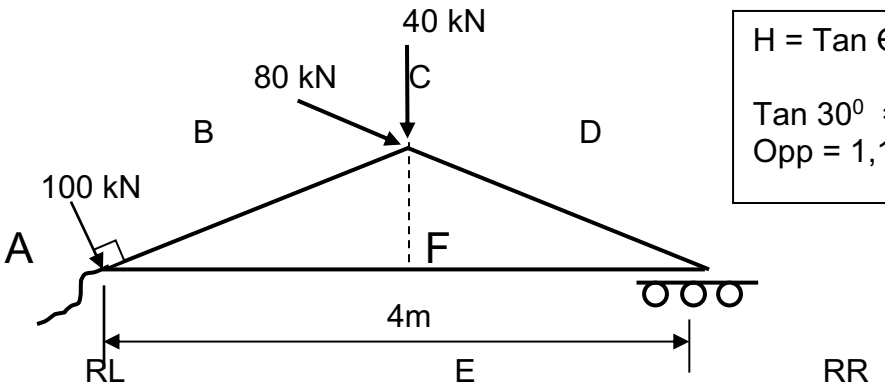

H = Tan Θ = $^{Opp}/_{Adj}$

Tan 30^0 = $^{opp}/_{2}$
Opp = 1,155 m

FIGURE: 1

1.1 Take Moment about RL; (anti-clockwise = clockwise)

(RR x 4) = (80 x 2) + (69,282 x 1,155)

RR = 60,005 kN →

Take Moment about RR: (clockwise = anti-clockwise)

(RL x 4) + (69,282 x 1,155) = (80 x 2) + (86,603 x 4)

RL = 106,598 kN →

Test: ↑ = ↓ 60,005+106,598 = 86,603 + 40 + 40 = 166,603 kN →

RR is on rollers, thus the force is vertical upwards.

∑ Hor Comp
50 + 69,282 KN
Total 119,282 to the right

119,282
Θ
159,973
Result
106,598

But RL is: Result = $\sqrt{Hc^2 + Vc^2}$ →

= $\sqrt{119{,}282^2 + 106{,}598^2}$

= 159,973 kN →

For direction, use Tan

Tan Θ = $\frac{106{,}598}{119{,}282}$

Θ = $\text{Tan}^{-1}\ \frac{106{,}598}{119{,}282}$

Θ = 41, 7860 → with Hor-line (8)

1.2

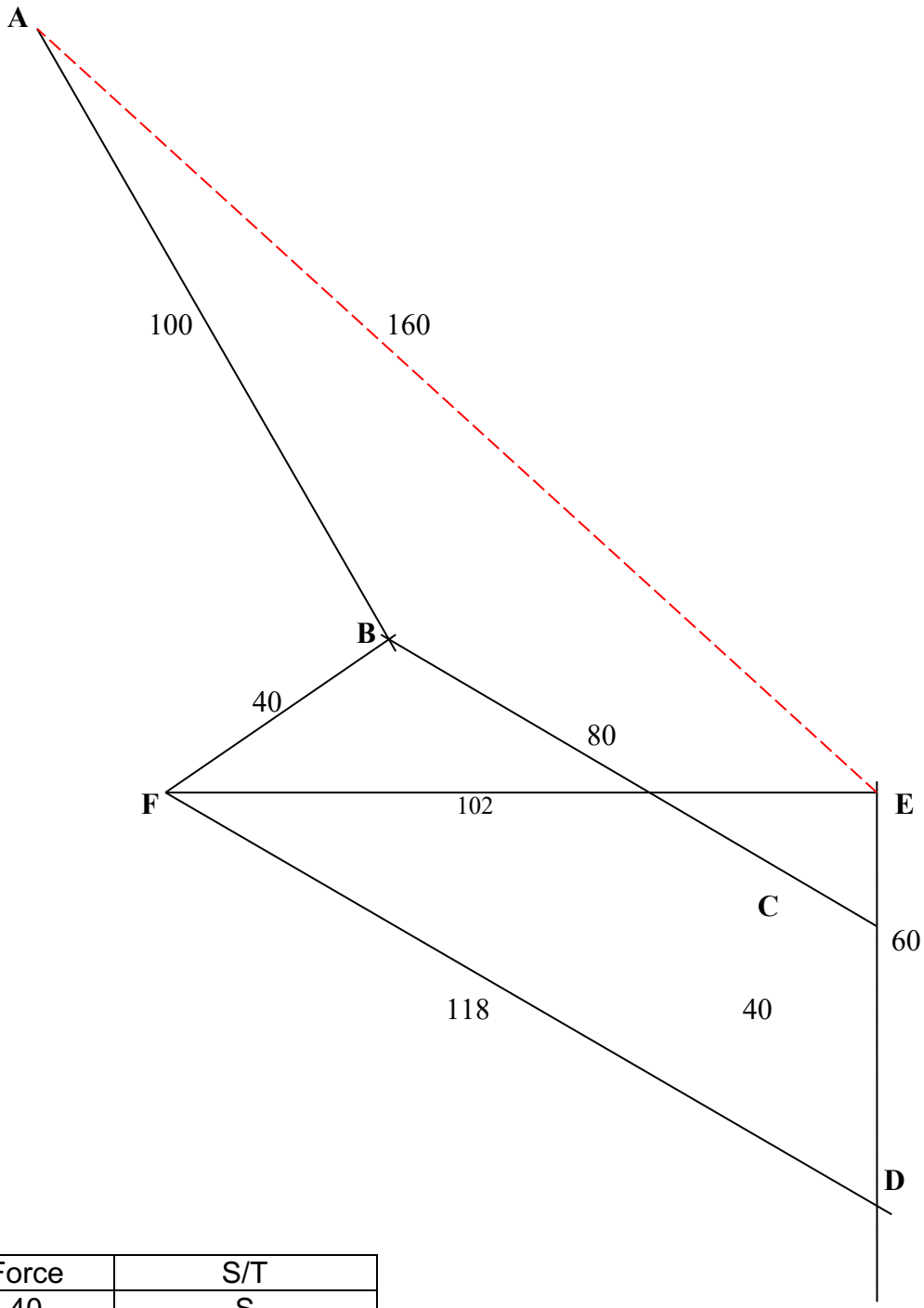

Member	Force	S/T
BF	40	S
DF	118	S
EF	102	T
AE	160	Result at RL

(6)
[14]

QUESTION 2

2.1 1 Force = Stress x Area √
= 150 x 3 x Ø x 8
= 150 x 3 x 16 x 8
= 57 600 N √√ (3) force + unit
= 57,6 kN

2 Force = Stress x Area √
= 150 x 2 x Ø x 8
= 150 x 2 x 20 x 8
= 48 000 N √√ (3) force +unit
= 48 kN

Thus safe load is the smallest, = 48 kN √ (3 + 3 + 1) (7)

2.2 Shear Stress (σ) = $\frac{\text{load}}{\text{area}} = \frac{\text{load}}{\text{n..x.}\pi\text{..x.}^2} = \frac{48\,000\text{ N}}{2.\text{x.}\pi\text{.x.}\pi^2\text{ mm}^2}$ √
= 76,394 MPa √√ (3)

2.3 Tearing (σ) = $\frac{\text{Load}}{(\text{B.x.t}).-.\text{n}(\varphi\text{n}(\varphi.:} = \frac{48\,000}{(60\times 8)-1(22\times 8)}$ √√
= 157,895 MPa √√ (4)
[14]

QUESTION 3

3.1 This is a symmetrical beam: Thus:

$R_L = R_R = \frac{2200}{2}$ = 1 100 kN each reaction. (2)

3.2 Calculate the shear force
A: -400 = -400 kN ½
B: -400 + 1 100 = + 700 kN ½
C: +700 … = +700 kN ½ √
C-D: + 700 – 600 = +100 ½
D: + 100 – 200 = -100 ½ √
D-E: -100 – 600 = -700 ½
E: -700 = -700 ½ √
F: -700 + 1 100 = + 400 ½
G: +400 – 400 = 0 kN SF max = 700 kN √√

Calculate the Bending Moment:
Looking from left
A: -400 x 0 = 0 KNm
B: -400 x 2 = -800 KNm √
C: -400 x 3 + 1 100 x 1 = -100 KNm √
D: -400 x 5 + 1 100 x 3 – 300 x 2 x 1 = + 700 KNm √
E: -400 x 7 +1 100 x 5 – 200 x 2 – 300 x 4 x 2 = -100 KNm √
Looking from right
F: -400 x 2 = -800 KNm
G: = 0 KNm BMomax = 800 KNm √ (5 + 5) (10)

3.3 Calculate the Sectional Modulus: (σ = 465 MPa) (1MPa = 1 N/mm^2)

BMo max = Bending Stress x Ze

$$Ze = \frac{BMomax}{Bstress} = \frac{800\,000\ N}{465 \times 10^6\ N/mm^2} = 1720430108\surd$$

Ze = 1 720 x 10^6 mm^2 √√

Select a H-Beam (1755 in steel tables)

H Beam is a: 305 x 305 x 118 kg/m √ (3 + 1) (4)

3.4 Check the shear stress:

$$\sigma = \frac{Shear.load}{area} = \frac{700\,000\ N}{314{,}5 \times 11{,}9} = 187{,}038\ N/mm^2\ (MPa)$$

(√ √√)

Thus: 187 < 200 MPa, the beam is OK. √ (4)
[20]

QUESTION 4

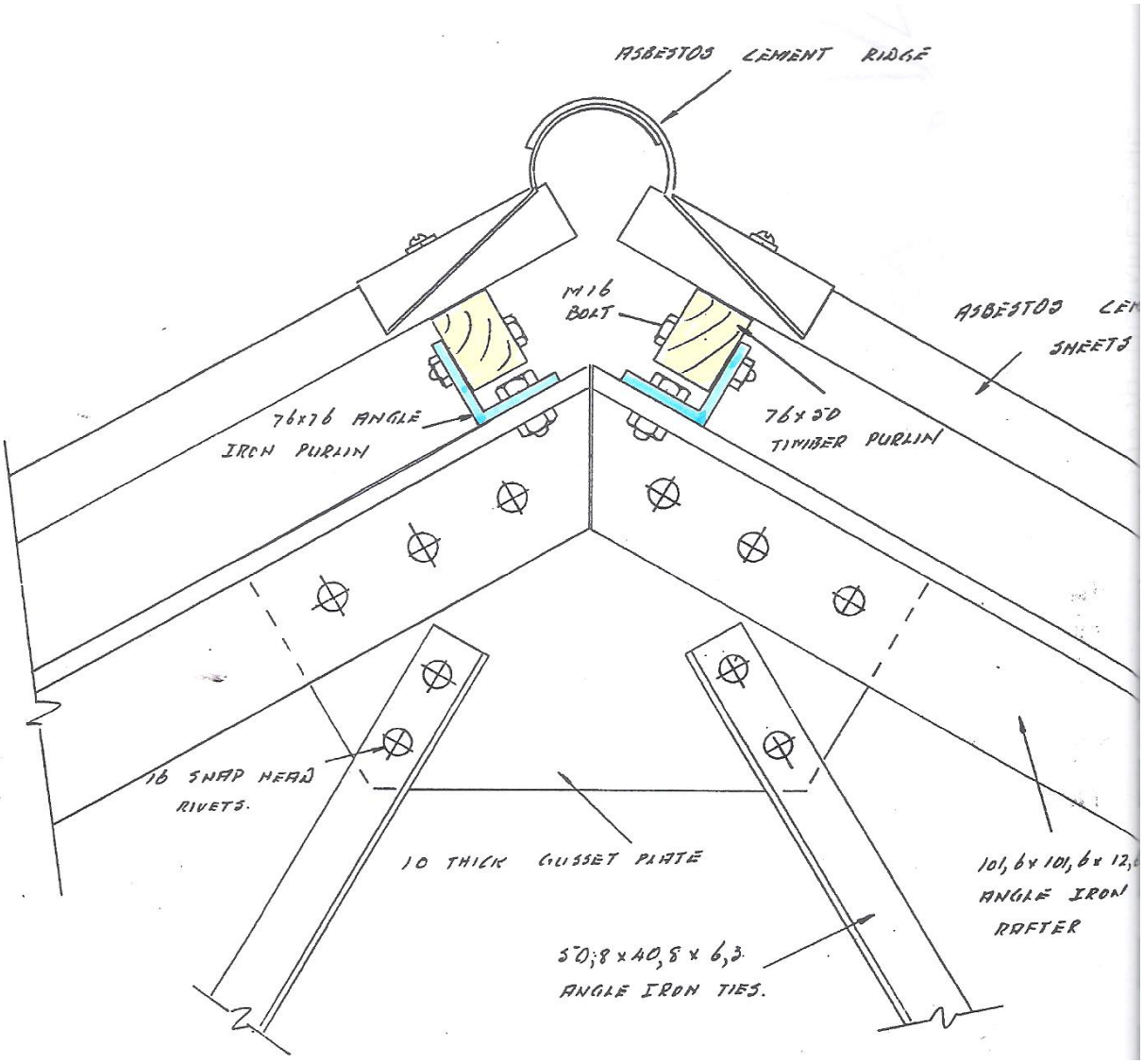

[15]

QUESTION 5

5.1

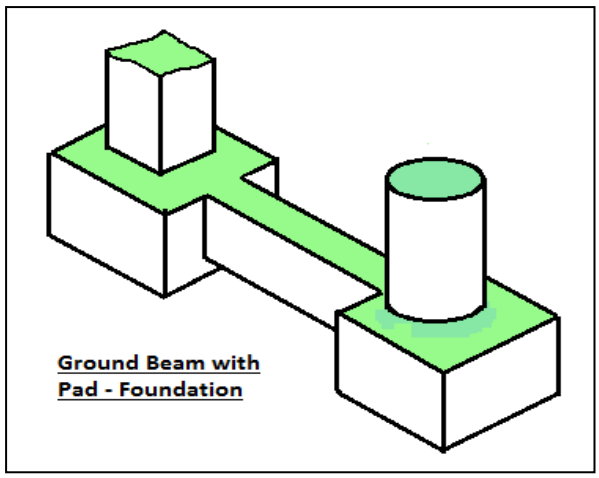

(5)

5.2

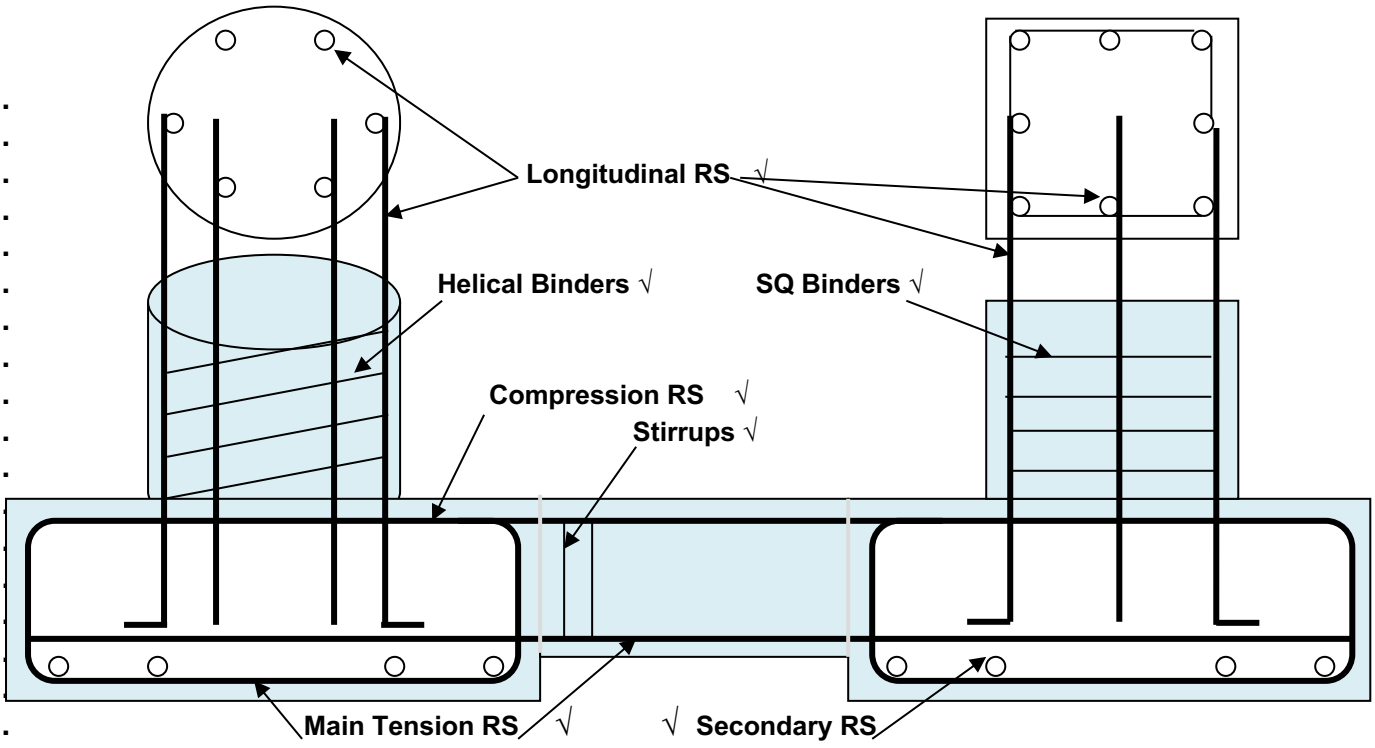

PAD FOUNDATIONS WITH GROUND BEAM SCALE 1:10 √√
(For drawing √)

(10)
[15]

QUESTION 6

Member	Bar mark	Type and size	No of members	No in Each	Total Number	Length of each Bar	Shape
Shear RS	1	Y40	7	1	7	9,500	
Main RS	2	Y32	7	2	14	9,300	
Comp RS	3	R25	7	2	14	9,300	
Binders	4	R6	7	36	252	0,780	
	√	√√√	√	√√	√√		√√√

[16]

QUESTION 7

7.1

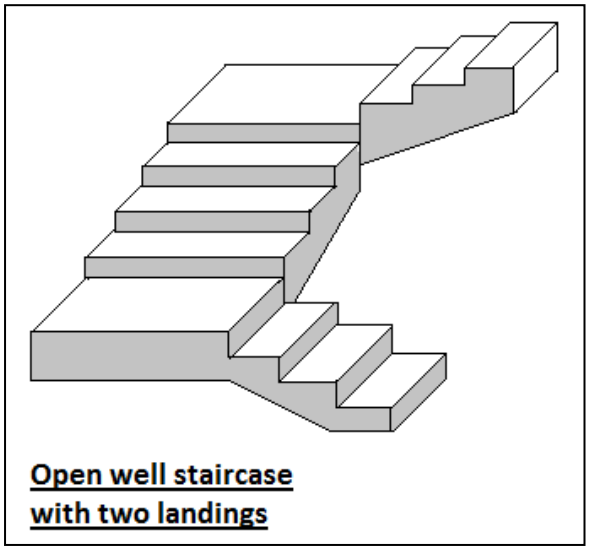

Drawing can also be with one landing, but an opening must be between the risings.

7.2

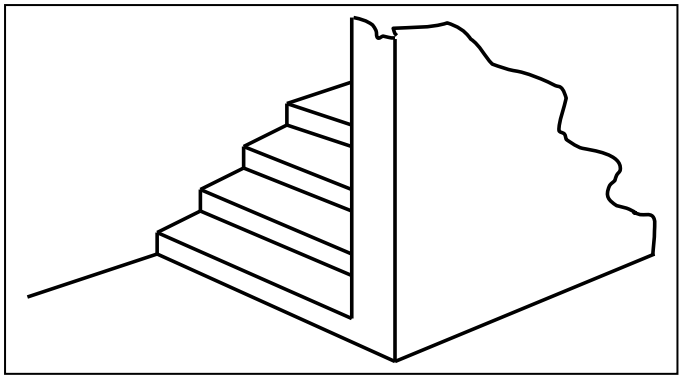

Transverse staircase is supported at the sides.

(2 x 3) **[6]**

TOTAL: 100

Copyright reserved