higher education & training

Department:
Higher Education and Training
REPUBLIC OF SOUTH AFRICA

MARKING GUIDELINE

NATIONAL CERTIFICATE

BUILDING AND STRUCTURAL CONSTRUCTION N5

13 AUGUST 2019

This marking guideline consists of 7 pages.

Copyright reserved

SECTION A: DESIGN

QUESTION 1: BOLT CONNECTION

1.1 Load = Area × stress
Load = $\frac{\pi 12^2}{4} \times 6 \times 100$✓
Load = 67 858 N/1 000✓
Load = 67,858 kN✓✓ (4)

1.2 Load = Area × stress
Load = d × t × fc × n
Load = 12 × (12) × 240 × 3✓
Load = 103 680 N✓
Load = 103,680 kN✓✓ (4)

1.3 Load = Area × stress
Load = $f_t \times [(B \times t) - n(d \times t)]$
Load = 155 × [(60 × 8) – 3(14 × 8)]✓
Load = 22 320 N✓
Load = 22,32 kN✓✓ (4)

1.4 Load = 22,32 kN (1)
[13]

QUESTION 2: LOADED BEAM

2.1 $\frac{RL.4}{4} = \frac{(18 \times 2) + (8 \times 6) - (8 \times 2)}{4}$
RL = 17 kN✓✓

$\frac{RL.4}{4} = \frac{(18 \times 2) + (8 \times 6) - (8 \times 2)}{4}$
RL = 17 kN✓✓ (4)

2.2 @ A = -8 kN✓
@ B = -8 + 17 = 9 kN✓
B–C = 9 – 4 = 5 kN✓
@ C = 5 – 10= -5 kN✓
C–D = 5 – 4 = -9 kN✓
@ D = -9 + 17 = 8 kN✓
@ E = 8 – 8 = 0 (see diagram on the next page) (6)

2.3 BM @ A = 0
BM @ B = (-8 × 2)= -16 kN✓✓
BM @ C = (-8 × 4) + (17 × 2) + (-4 × 1) = -2 kN✓✓
BM @ D = (-8 × 2) = -16 kN✓✓
BM @ E = 0 (see diagram on the next page) (6)

2.4 $Ze = \frac{Bm\ max}{Pt}$

$= \frac{16}{165} \times 1\,000 = 96{,}97 \times 10^{-6}\ m^3$✓

New Ze = $116{,}0 \times 10^{-6}\ m^3$✓
Use size 152 × 89 × 17,1 kg/m✓ (3)

2.5 $F_s = \frac{Load}{Area} = \frac{9 \times 1\,000}{152{,}4 \times 4{,}9}$✓

= 12,052✓

12,052 is less than 100 MPa, thus safe.✓

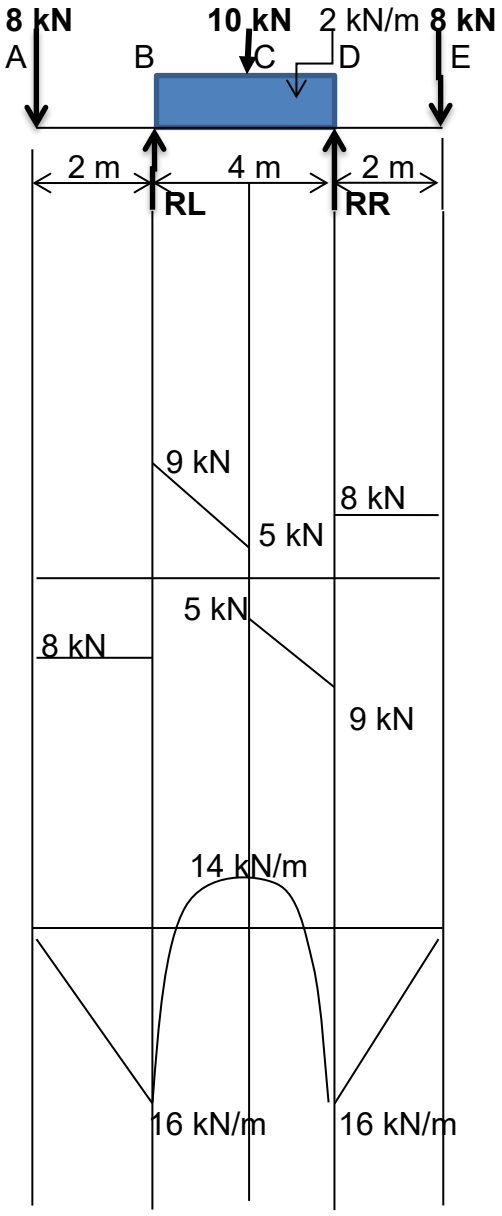

(3)
[22]

QUESTION 3: FRAME

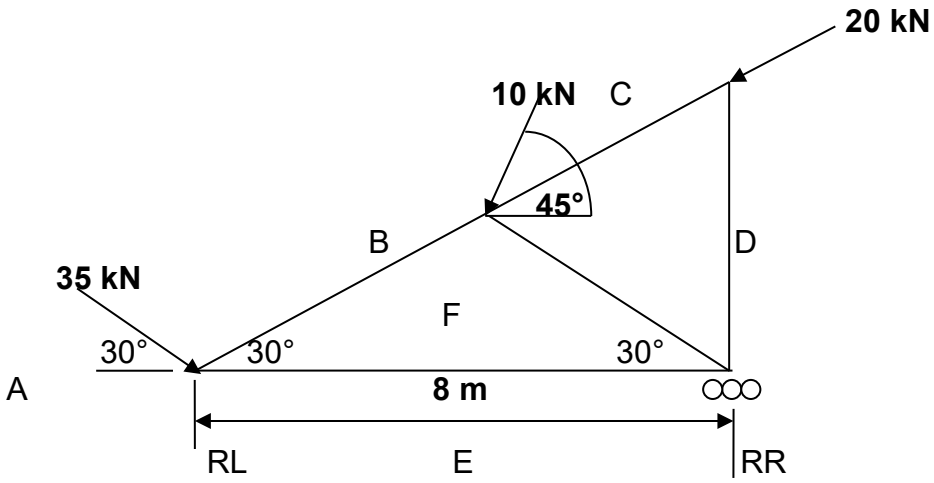

3.1 Take moment @ RR

$$\frac{RL.8}{8} = \frac{(17,5 \times 8) + (7,071 \times 4) + (7,071 \times 2,31) + (17,321 \times 4,629)}{8}$$

RL = 33,10 kN✓✓

Take moment @ RL

$$\frac{RR.8}{8} = \frac{(7,071 \times 4) + (10 \times 8) - (7,071 \times 2.31) - (17,321 \times 4,629)}{8}$$

RR = 1,471 kN✓

$\sum$ HC = 30,31– (17,321 + 7,071)
= 5,918✓

$\sum$ RL result = $\sqrt{VC^2 + \sum HC^2}$

= $\sqrt{(33,10)^2 + (5,918)^2}$✓

= 33,228 kN✓

Direction = $\tan \theta = \frac{VC}{\sum HC}$

$\theta = \tan^{-1} \frac{33,10 \text{ kN}}{5,918}$

θ = 79° 15'47"✓✓ (8)

3.2

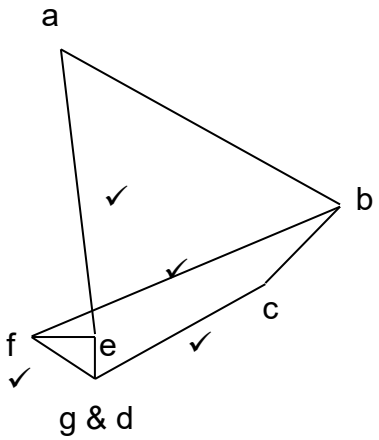

Member	Magnitude	Nature
BF	32,5√	Strut√
FE	3√	Tie√
CG	20√	Strut√
GF	3,5√	Strut√

(9)
[17]

TOTAL SECTION A: 52

SECTION B: DRAUGHTING

QUESTION 4: CONCRETE FOUNDATION

4.1

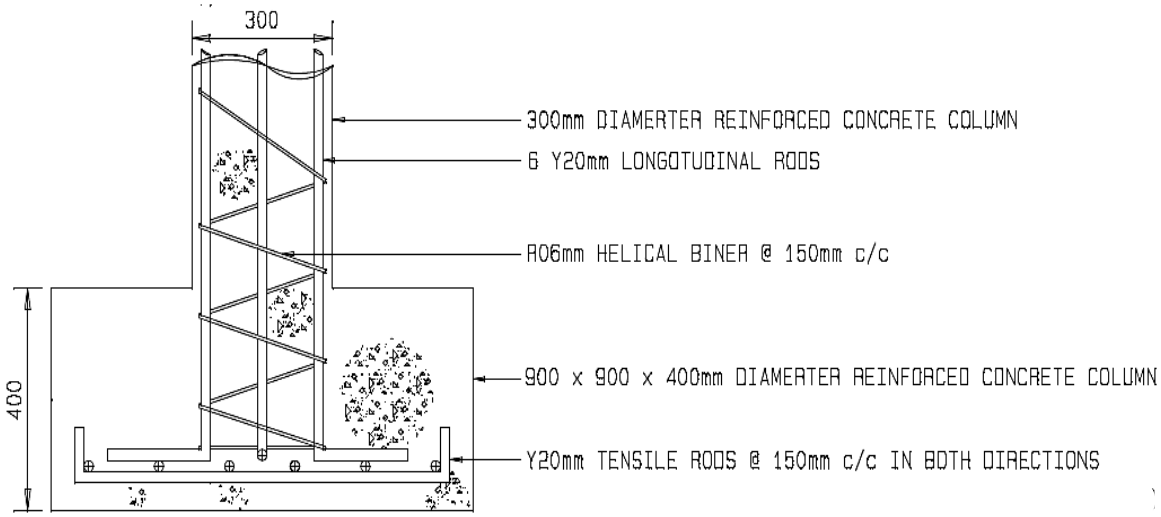

(10)

4.2

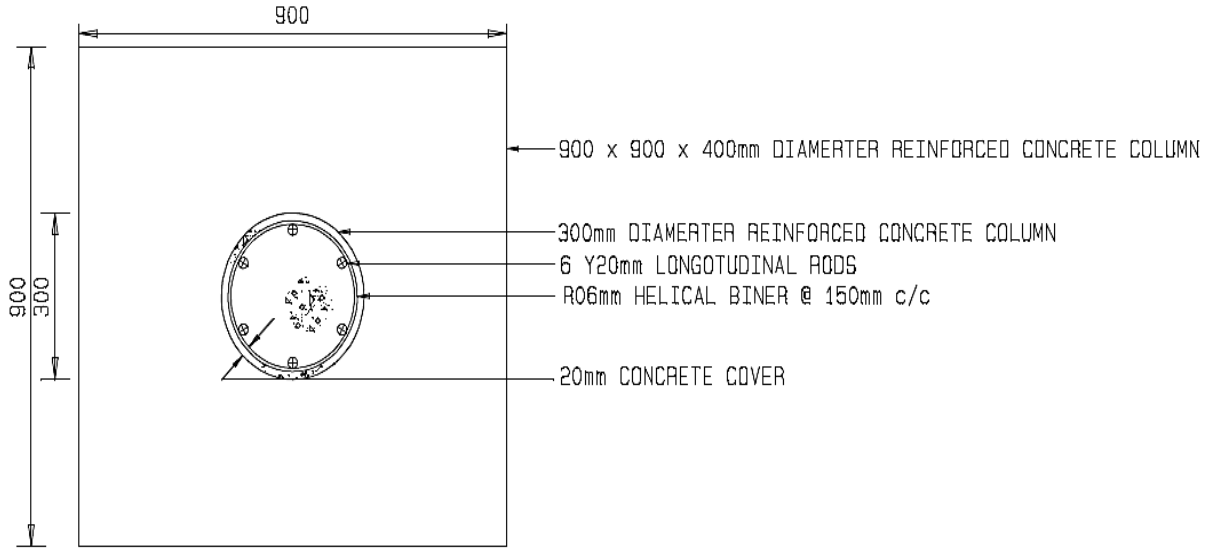

A VERTICAL AND TOP VIEW OF THE REINFORCED CONCRETE PAD FOUNDATION SSUPPORTING COLUMN. SCALE :10

(10)
[20]

QUESTION 5: WOODEN STAIRCASE

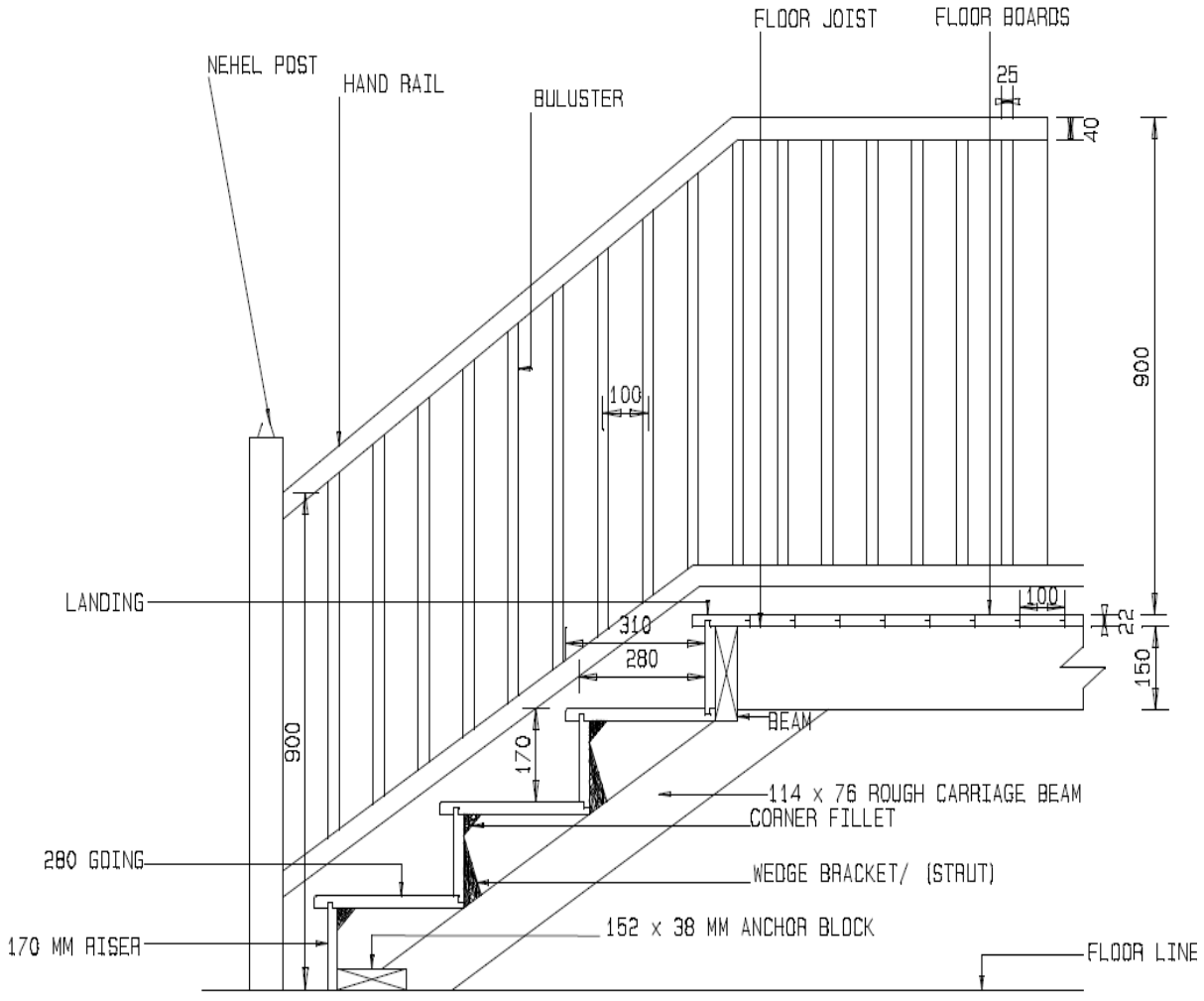

A VERTICAL LONGITUDINAL SECTION OF A WOODEN STAIRCASE
SCALE 1:10

[14]

QUESTION 6: CONCRETE FLOORS

6.1

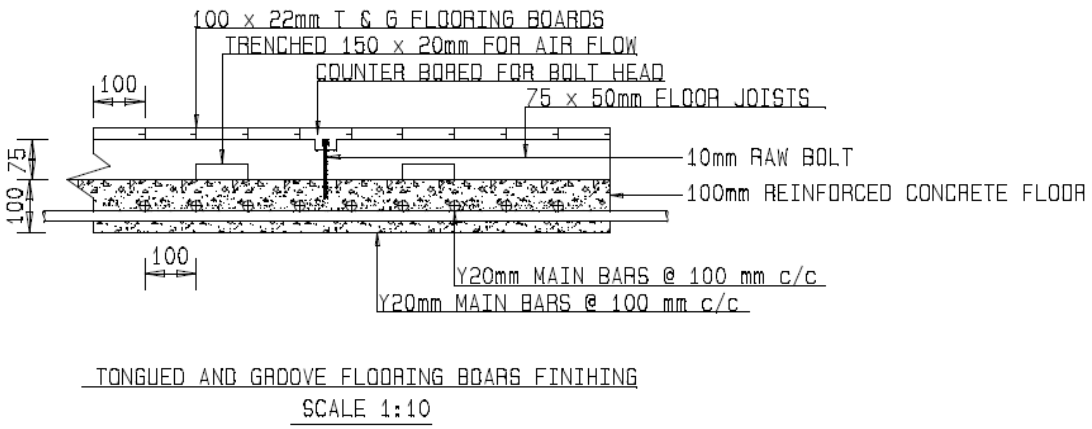

6.2

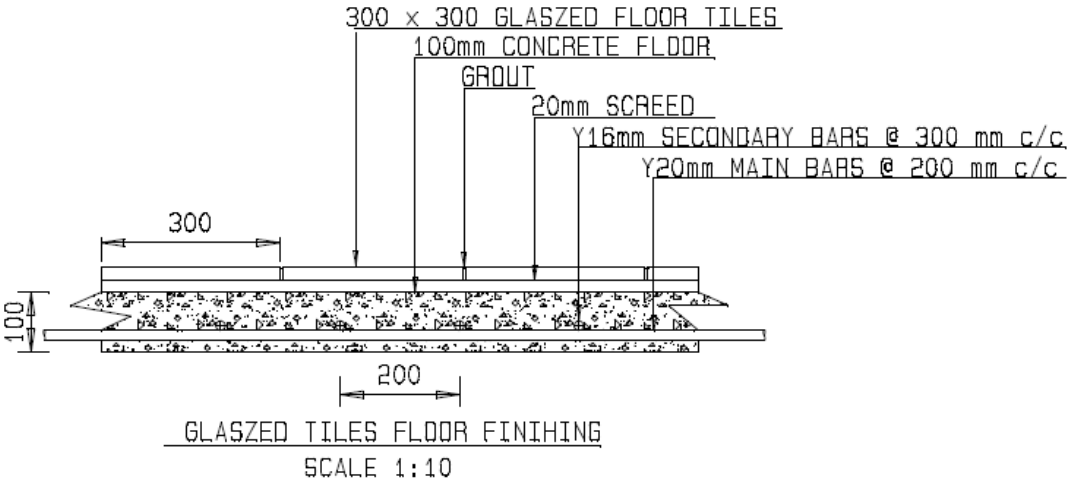

(7)
[14]

RUBRIC FOR QUESTIONS 4 – 6.2						
ITEM	**DESCRIPTION**	**QUESTION NUMBERS**				
		4.1	**4.2**	**5**	**6.1**	**6.2**
1	Construction accuracy	4	4	5	3	3
2	General line work	1	1	2	-	-
3	Constructional details	-	-	2	-	-
4	Labelling	3	3	3	2	2
5	Title	1	1	1	1	1
6	Scale	1	1	1	1	1
	TOTAL	**20**		**14**	**14**	

TOTAL SECTION B: 48
GRAND TOTAL: 100

Copyright reserved