higher education & training

Department:
Higher Education and Training
REPUBLIC OF SOUTH AFRICA

# MARKING GUIDELINE

## NATIONAL CERTIFICATE

## BUILDING AND STRUCTURAL CONSTRUCTION N5

**7 AUGUST 2018**

**This marking guideline consists of 9 pages.**

Copyright reserved

## QUESTION 1

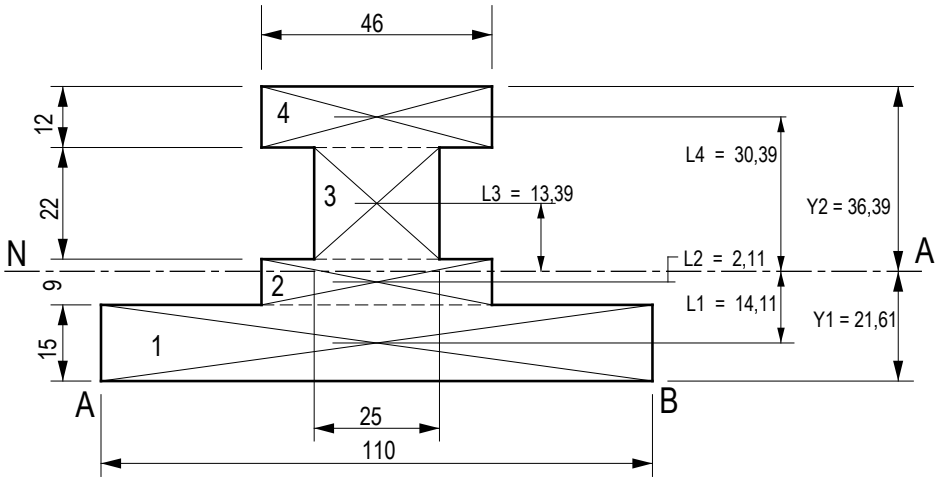


1.1 Calculate areas:

Area 1: $110 \times 15 = 1\,650$
Area 2: $46 \times 9 = 414$
Area 3: $25 \times 22 = 550$
Area 4: $46 \times 12 = 552$

Total area $= 3\,166$✓

Calculate the neutral axis from A-B

$3\,166 \times y_1 = (1\,650 \times 7{,}5) + (414 \times 19{,}5) + (550 \times 35) + (552 \times 52)$✓✓

$$Y_1 = \frac{12\,375 + 8\,073 + 19\,250 + 28\,704}{3\,166}$$✓

$$Y_1 = \frac{68\,402}{3\,166}$$

$Y_1 = 21{,}61$ mm✓ (5)

1.2 $I_{xx\,Total} = \left(\frac{bd^3}{12} + al^2\right) + \left(\frac{bd^3}{12} + al^2\right) + \left(\frac{bd^3}{12} + al^2\right) + \left(\frac{bd^3}{12} + al^2\right)$

$I_{xx\,1} = \left(\frac{110 \times 15^3}{12} + 110 \times 15 \times 14{,}11^2\right)$
$= (30\,937{,}5 + 328\,501{,}97) = 359\,439{,}47 \text{mm}^4$ ✓✓

$I_{xx\,2} = \left(\frac{46 \times 9^3}{12} + 46 \times 9 \times 2{,}11^2\right)$
$= (2\,794{,}5 + 1\,843{,}17) = 4\,637{,}67 \text{ mm}^4$ ✓✓

$I_{xx\,3} = \left(\frac{25 \times 22^3}{12} + 25 \times 22 \times 13{,}99^2\right)$
$= (49\,817{,}33 + 107\,646{,}06) = 157\,463{,}39 \text{ mm}^4$ ✓✓

$I_{xx\,4} = \left(\frac{46 \times 12^3}{12} + 46 \times 12 \times 30{,}39^2\right)$
$= (6\,624 + 509\,800{,}76) = 516\,424{,}76 \text{ mm}^4$ ✓✓

$I_{xx\,Total} = 1\,037\,965{,}29 \text{ mm}^4$ (9)

1.3 $Z = \frac{I}{Y}$

$Z = \frac{\mathbf{1\,037\,965{,}29\ mm4}}{\mathbf{21{,}61\ mm}}$ ✓✓

$Z = 48\,031{,}71 \text{ mm}^3$ ✓ $48{,}03 \times 10^{-6} \text{ m}^3$ (3)
**[17]**

## QUESTION 2

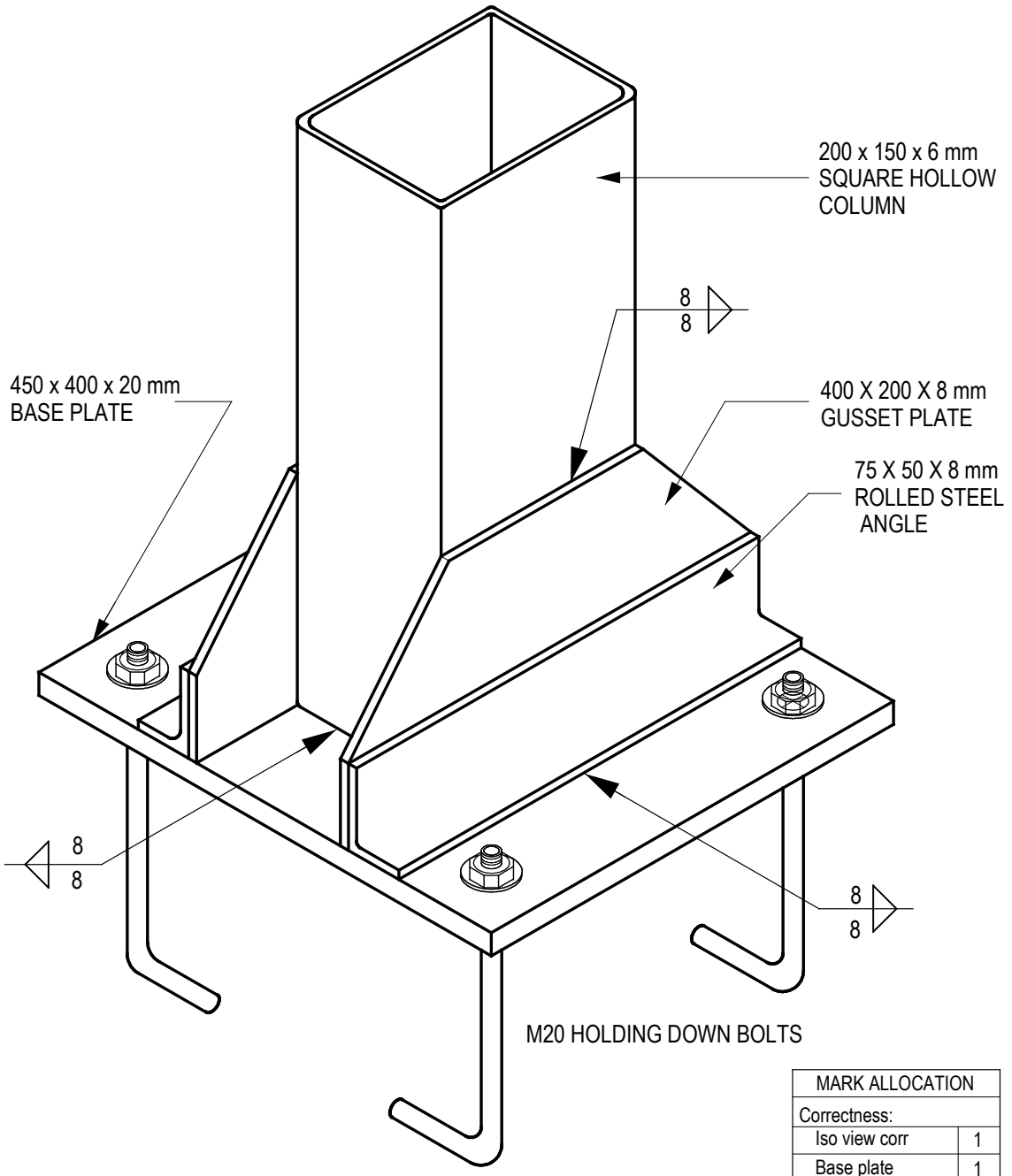


| MARK ALLOCATION | |
|---|---|
| Correctness: | |
| Iso view corr | 1 |
| Base plate | 1 |
| Column | 2 |
| Gussets | 2 |
| Angles | 2 |
| Bolts | 3 |
| | |
| Accuracy | 3 |
| Welding symbols | 1 |
| Labels | 3 |
| Total | 18 |

**[18]**

**QUESTION 3**

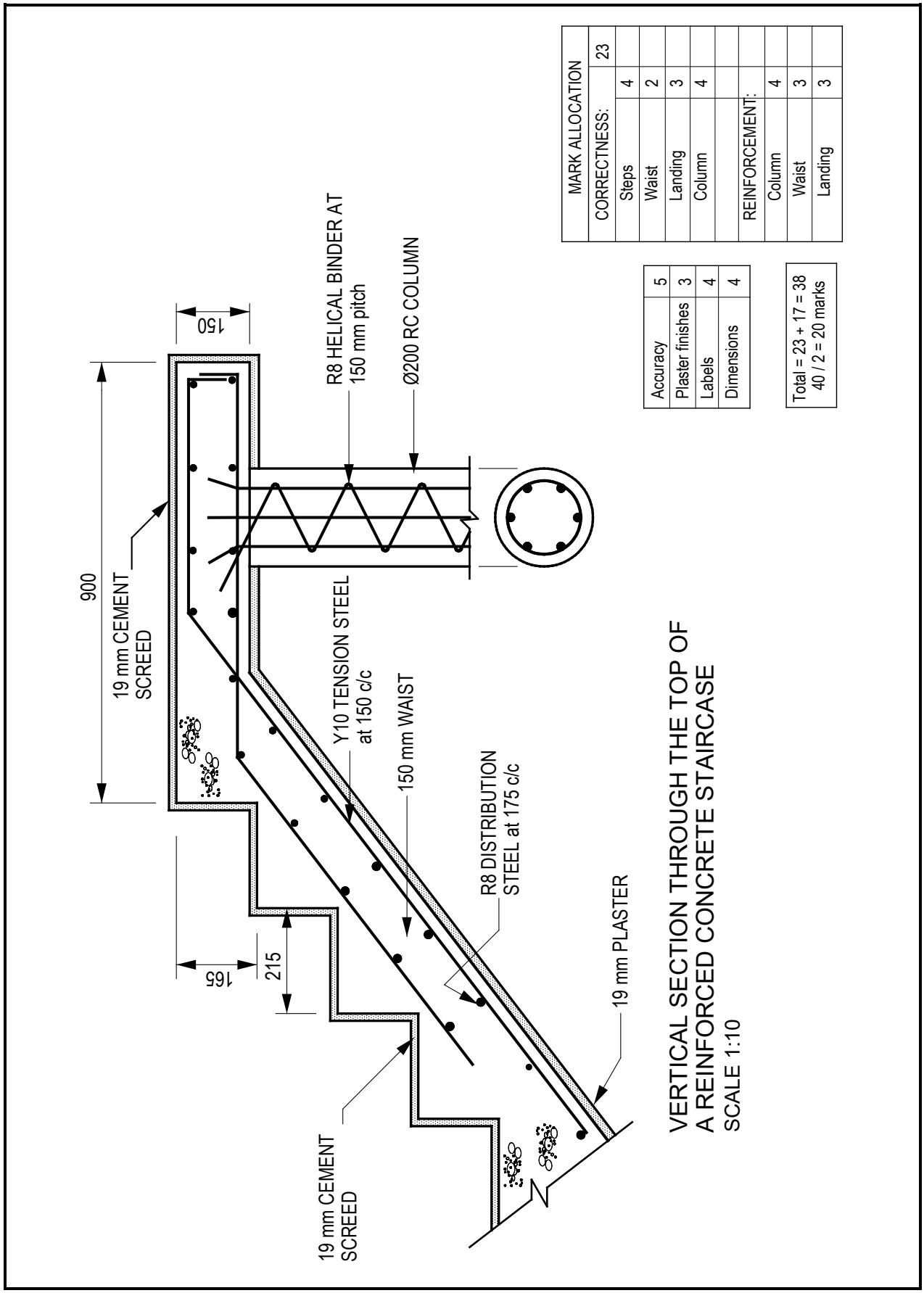


| MARK ALLOCATION | |
|---|---|
| CORRECTNESS: | 23 |
| Steps | 4 |
| Waist | 2 |
| Landing | 3 |
| Column | 4 |
| | |
| REINFORCEMENT: | |
| Column | 4 |
| Waist | 3 |
| Landing | 3 |

| | |
|---|---|
| Accuracy | 5 |
| Plaster finishes | 3 |
| Labels | 4 |
| Dimensions | 4 |

Total = 23 + 17 = 38
40 / 2 = 20 marks

**[20]**

## QUESTION 4

4.1 **The screw thread is within the shearing plane**

$$\text{Load} = \text{area} \times \text{stress}$$

$$F_s = A_s \times f_s \times n$$

$$\text{Force in shear} = \frac{\pi\,(d - 0{,}9382\,p)^2}{4} \times f_s \times n$$

$$= \frac{\pi\,(10 - 0{,}9382 \times 1{,}75)^2}{4} \times 100\ \text{N/mm}^2 \times 6 \checkmark\checkmark$$

$$\text{Force in shear} = 32{,}92\ \text{kN} \checkmark\checkmark \quad (4)$$

4.2 **The screw thread is outside the shearing plane**

$$\text{Load} = \text{area} \times \text{stress}$$

$$F_s = A_s \times f_s \times n$$

$$\text{Force in shear} = \frac{\pi\,d^2}{4} \times f_s \times n$$

$$= \frac{\pi 10^2}{4} \times 100\ \text{N/mm}^2 \times 6 \checkmark\checkmark$$

$$\text{Force in shear} = 47{,}12\ \text{kN} \checkmark\checkmark \quad (4)$$

4.3

$$\text{Load} = \text{area} \times \text{stress}$$

$$F_s = A_t \times f_t \times n$$

$$\text{Force in tearing} = [(B \times T) - n\,(d \times t)] \times f_t$$

$$= [(40 \times 8) - 2\,(12 \times 8)] \times 155\ \text{N/mm}^2 \checkmark\checkmark$$

$$\text{Force in tearing} = 19{,}84\ \text{kN} \checkmark\checkmark \quad (4)$$

**[12]**

## QUESTION 5

5.1

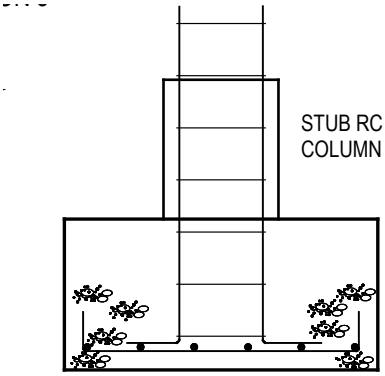


REINFORCED CONCRETE
PAD FOUNDATION WITH
STUB COLUMN

| MARK ALLOCATION | |
|---|---|
| Pad foundation cor | 1 |
| Column in place | 2 |
| Reinforcement | 2 |
| Total | 5 |

(5)

5.2

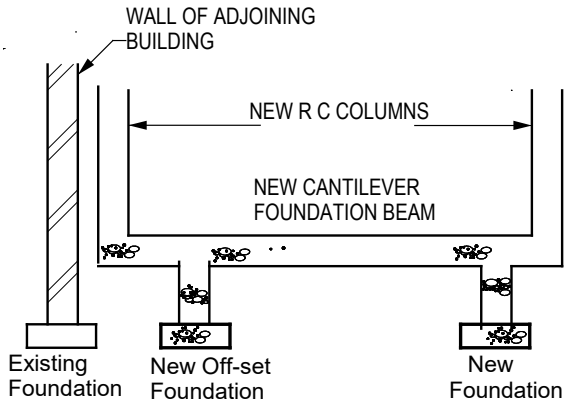


| MARK ALLOCATION | |
|---|---|
| Foundations | 1 |
| Cantilever beam | 1 |
| Columns | 2 |
| Existing wall | 1 |
| Total | 5 |

(5)
**[10]**

## QUESTION 6

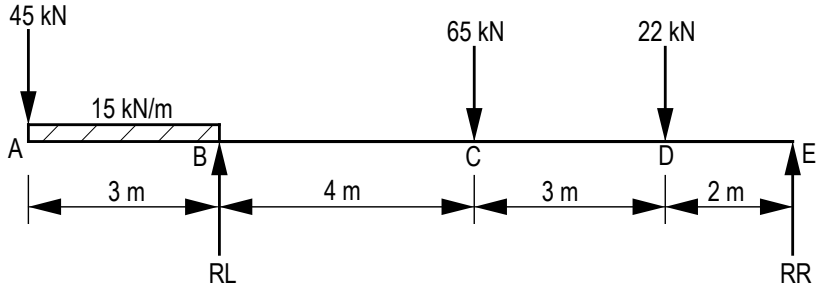


6.1 Take moments about RL:

$(RR \times 9) + (15 \times 3 \times 1,5) + (45 \times 3) = (65 \times 4) + (22 \times 7)$✓

$RR = \frac{260 + 154 - 67,5 - 135}{9}$

$RR = 23,5$ kN✓

Take moments about RR:

$(RL \times 9) = (45 \times 12) + (15 \times 3 \times 10,5) + (65 \times 5) + (22 \times 2)$

$RL = \frac{540 + 472,5 + 325 + 44}{9}$

$RL = 153,5$ kN✓ (4)

6.2

| | |
|---|---|
| SF A: -45 kN | -45 kN |
| SF B: -45 – (15 × 3) | -90 kN✓ |
| (Max) | 63,5 kN |
| SF B: -45 – (15 × 3) + 153,5 | 63,5 kN✓ |
| SF C: 153,5 – 45 – (15 × 3) | -1,5 kN✓ |
| SF C: 153,5 – 45 – (15 × 3) – 65 | -1,5 kN |
| SF D: 153,5 – 45 – (15 × 3) – 65 | -23,5 kN |
| SF D: 153,5 – 45 – (15 × 3) – 65 – 22 | -23,5 kN |
| SF E: 153,5 – 45 – (15 × 3) – 65 – 22 | |

(3)

6.3

| | |
|---|---|
| BM B: -(45 × 3) – (15 × 3 × 1,5) | -202,5 kN.m✓ |
| BM C: (153,5 × 4) – (45 × 7) – (15 × 3 × 1,5) | 51,5 kN.m✓ |
| BM D: (23,5 × 2) | 47 kN.m✓ |

(3)

6.4 $Ze = \frac{B\,M\,max}{Stress} = \frac{202,5 \times 10^6}{165} = 1\,227\,272,73$ mm$^3$✓✓

$Ze = 1\,227,27 \times 10^{-6}$ m$^3$ (2)

6.5 Select: $457 \times 191 \times 67,1$ kg/m $(Ze = 1\,297 \times 10^{-6})$✓ (1)

6.6 Shear stress $= \frac{S\,F\,max}{D \times t} = \frac{90 \times 10^3}{453,6 \times 8,5} = 23,34$ MPa✓✓

$Ze = 23,34 < 100$ MPa✓ (3)

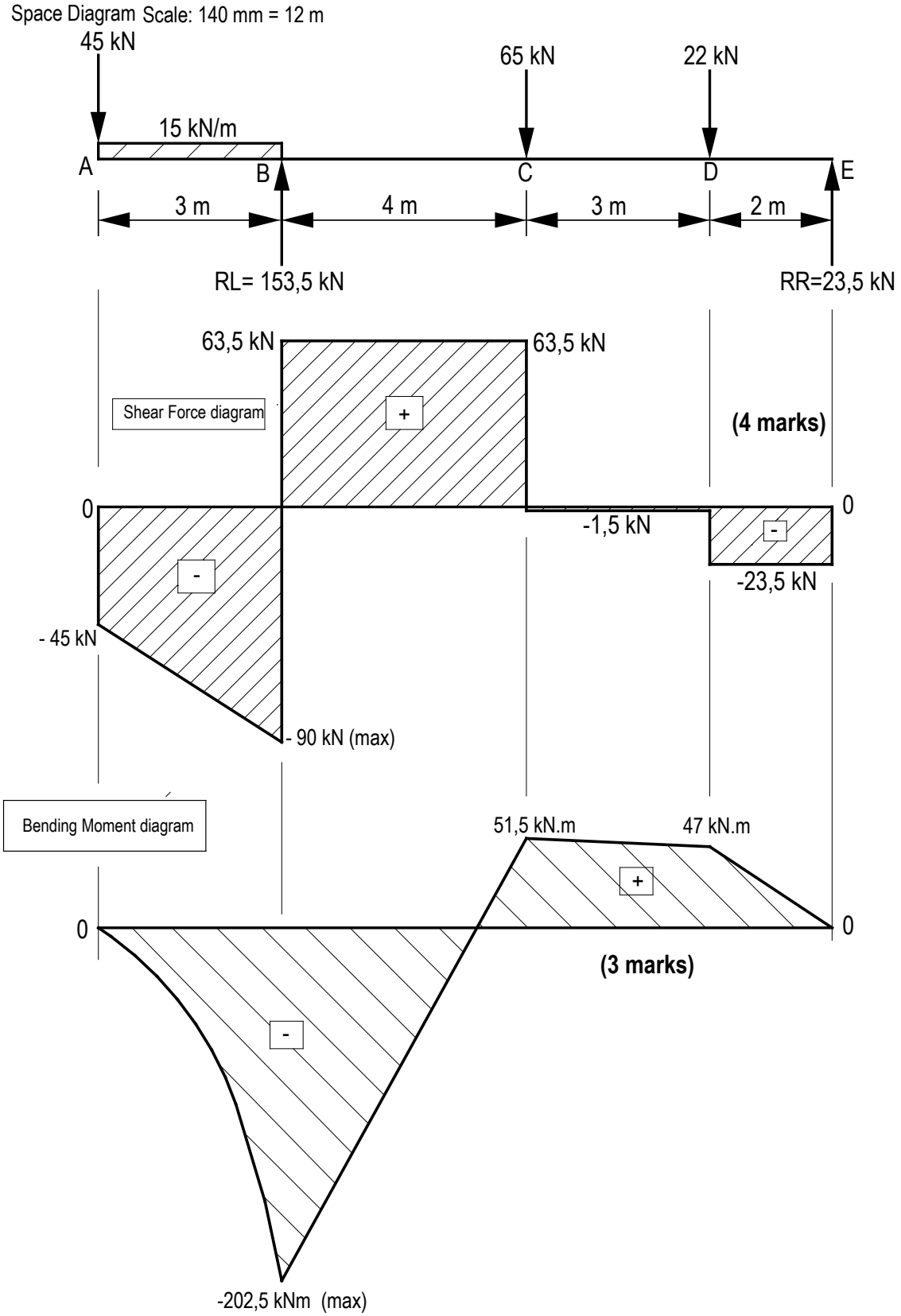


(4)

(3)
**[23]**

**TOTAL: 100**

Copyright reserved