higher education & training

Department:
Higher Education and Training
REPUBLIC OF SOUTH AFRICA

NATIONAL CERTIFICATE

BUILDING AND STRUCTURAL CONSTRUCTION N5

(8060015)

22 April 2021 (X-paper)
09:00–13:00

OPEN-BOOK EXAMINATION

REQUIREMENTS: A2 drawing sheet
Hot-rolled steel sections (BOE 8/2)

Nonprogrammable calculators and drawing instruments may be used.

This question paper consists of 6 pages, 2 diagram sheets and 1 formula sheet.

291Q1A2122

Copyright reserved

DEPARTMENT OF HIGHER EDUCATION AND TRAINING
REPUBLIC OF SOUTH AFRICA

NATIONAL CERTIFICATE
BUILDING AND STRUCTURAL CONSTRUCTION N5
TIME: 4 HOURS
MARKS: 100

INSTRUCTIONS AND INFORMATION

1. Answer all the questions.
2. Read all the questions carefully.
3. Number the answers according to the numbering system used in the question paper.
4. Answer QUESTIONS 1, 3, 5 and 7 on the A2 DRAWING SHEET.
5. Make all drawings in pencil with bold outlines.
6. Drawings must be done in accordance with National Standards and be fully labelled with descriptive notes and dimensions (where applicable).
7. All calculations must conform to the relevant SABS/SANS Code of Practices.
8. Work neatly.

Copyright reserved

QUESTION 1

FIGURE 1, DIAGRAM SHEET 1 (attached), shows a cantilever steel frame secured against a concrete wall at a bus stop. The frame is pitched at 30° and supports three loads.

Use the following scales:

Space diagram: 110 mm = 5,5 m
Vector diagram: 1 mm = 2 kN

1.1 Use the graphical method to obtain the forces in the frame and distinguish between struts and ties. (5)

1.2 Determine the forces and angles at the reactions R and T. (4)

1.3 Draw a table with the headings MEMBER, MAGNITUDE and TYPE and tabulate the answers. (6)
[15]

QUESTION 2

FIGURE 2, DIAGRAM SHEET 1 (attached), shows a lap joint formed by two 90 × 10 mm thick tie bars bolted together by means of SIX M12 Grade 4,6 bolts. The maximum shear stress is 101 MPa.

2.1 Determine the resistance of the bolts due to shearing. The thread of the bolts is within the shearing plane. The pitch of the screw thread is 2 mm. (3)

2.2 Draw a neat sketch to show the thread of the bolt within the shearing plane. (3)

2.3 Make a large, neat drawing to show how a plate tears when a tensile force is applied. (3)
[9]

Copyright reserved

QUESTION 3

Reinforced concrete ground beams are constructed between columns to support external brick walls. The ends of the ground beam rest on top of a concrete pad foundation.

Draw, to scale 1:10, a vertical longitudinal section through one of the pad foundations, the reinforced concrete column, ground beam and foundation wall.

Use the following specifications:

Pad foundation:	1 000 × 450 mm reinforced with Y16 bars at 200 mm both ways
Reinforced concrete column:	270 × 270 mm reinforced with 4Y20 main bars and R8 binders at 200 centres
Reinforced concrete ground beam:	270 × 450 mm reinforced with 3Y20 tension bars, 2Y16 compression bars and R10 binders at 200 centres
Brick wall:	FOUR courses high

TWO diameter steel dowels are cast in the top of the foundation to secure the beam to the foundation. Show at least 200 mm of the column above the ground beam. Use single lines to indicate the reinforcement. The completed drawing must include all labels and dimensions. **[18]**

QUESTION 4

FIGURE 3, DIAGRAM SHEET 2 (attached), shows a T-piece with a 48 mm diameter solid round figure attached to the top.

Calculate:

4.1 The position of the neutral axis calculated from the bottom (4)

4.2 The second moment of area (7)

4.3 The section modulus about the x-x axis (2)

4.4 The bending-moment maximum using a bending stress of 154 MPa (2)

[15]

Copyright reserved

QUESTION 5

FIGURE 4 shows an isometric view of an H-section parallel flange universal column secured to a concrete pad foundation. The top of the base is finished off with a 19 mm fillet.

Draw, to scale 1:10, the views in first-angle orthographic projection:

5.1 The front view as seen in the direction of the arrow at A

5.2 The top view

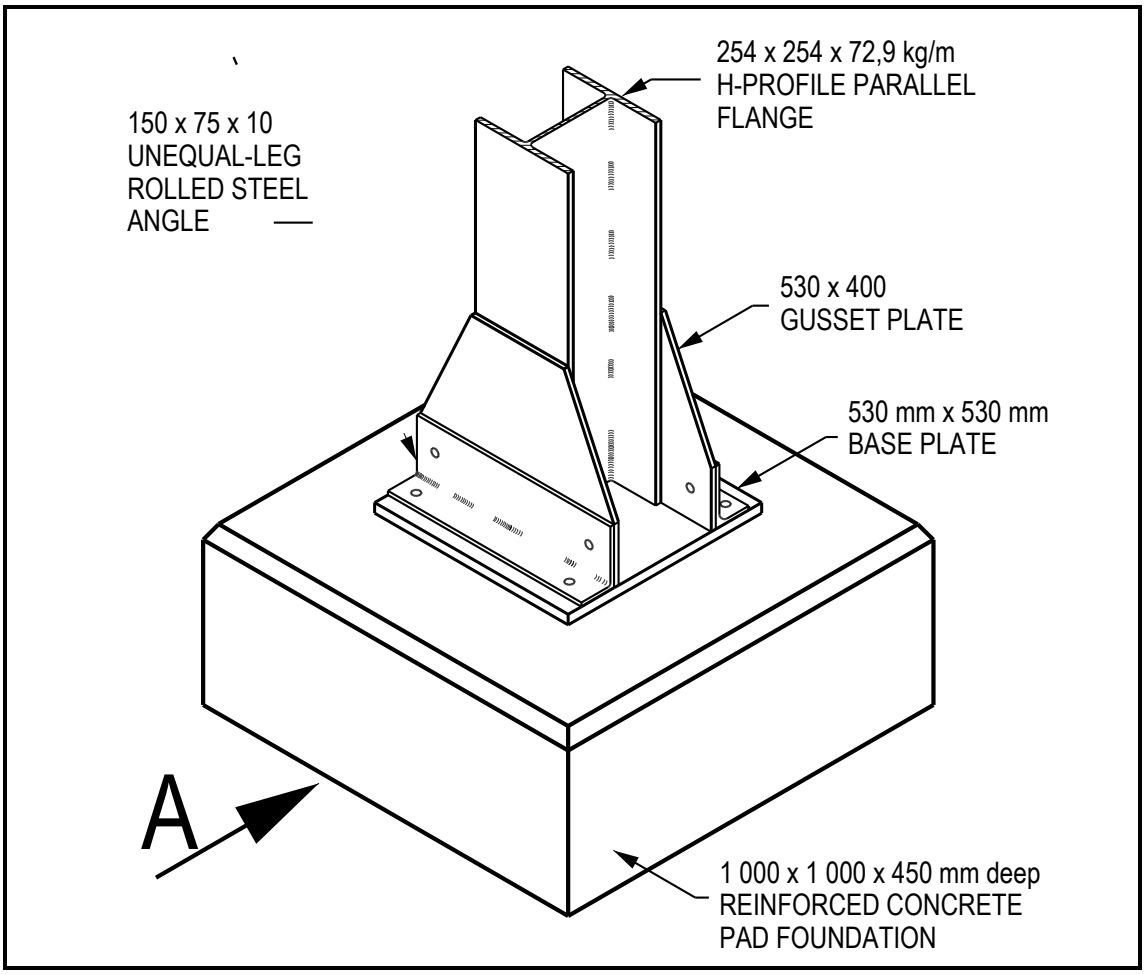

FIGURE 4

The top view must be drawn below the front view. The completed drawing must be dimensioned and fully labelled. Show the position of the bolt holes in the top view. **[15]**

Copyright reserved

QUESTION 6

Design a suitable I-taper flange steel beam to support the loads shown in FIGURE 5, DIAGRAM SHEET 2 (attached). Do not consider the self-weight of the steel beam. Use a bending stress of 162 MPa.

6.1 Calculate the value of the TWO reactions. (4)

6.2 Calculate the shear-force values at A, C, D, E and B. (5)

6.3 Calculate the bending-moment values at C, D and E. (3)

6.4 Calculate the section modulus and select the suitable I-section parallel flange. (3)

6.5 Calculate the shear stress of the chosen beam. (3)

[18]

QUESTION 7

7.1 Draw TWO neat top-view drawings to show the pattern layouts of the following types of floor coverings. Each drawing must be drawn within a 150 × 150 mm square.

7.1.1 110 × 220 mm brick tiles laid to a herringbone pattern

7.1.2 225 × 75 mm wood blocks laid to a basket-weave pattern

(2 × 3) (6)

7.2 Draw neat drawings to show the types of welding symbols. The position of the arrow must be indicated.

7.2.1 A fillet weld both sides and all round

7.2.2 Welding that must be done on site

(2 × 2) (4)

[10]

TOTAL: 100

Copyright reserved

DIAGRAM SHEET 1

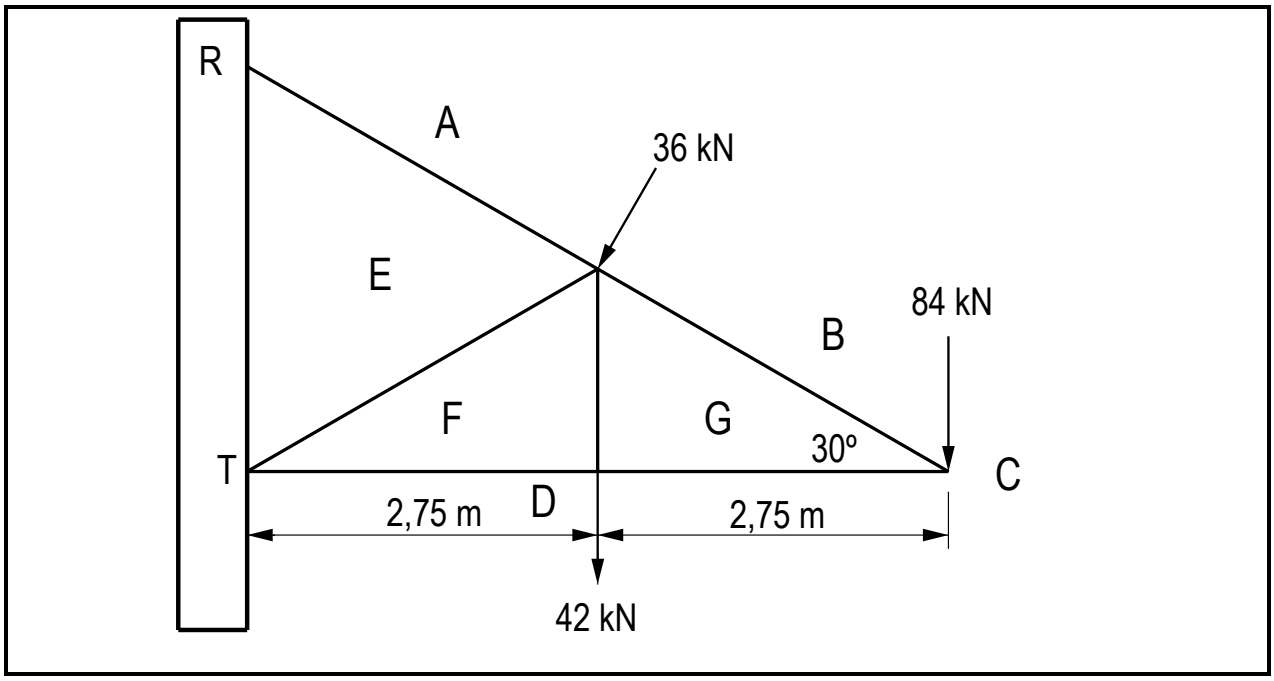

FIGURE 1

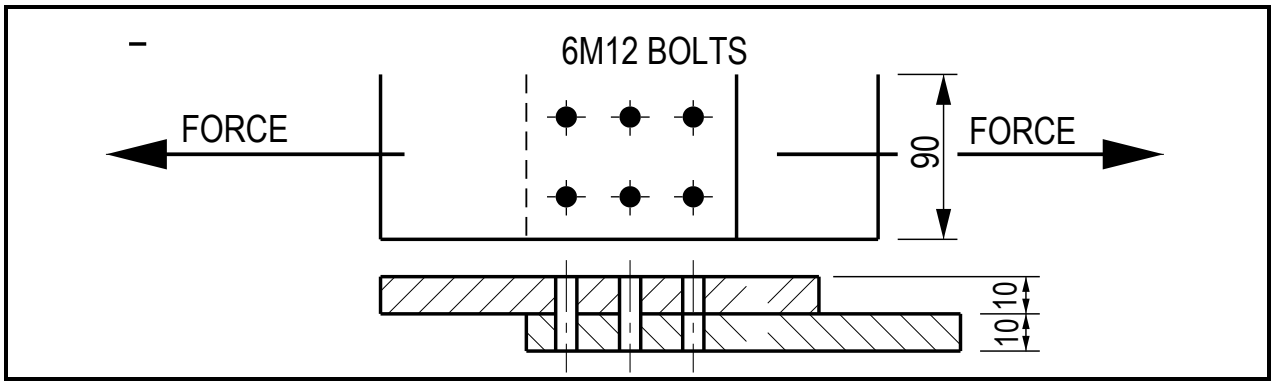

FIGURE 2

Copyright reserved

DIAGRAM SHEET 2

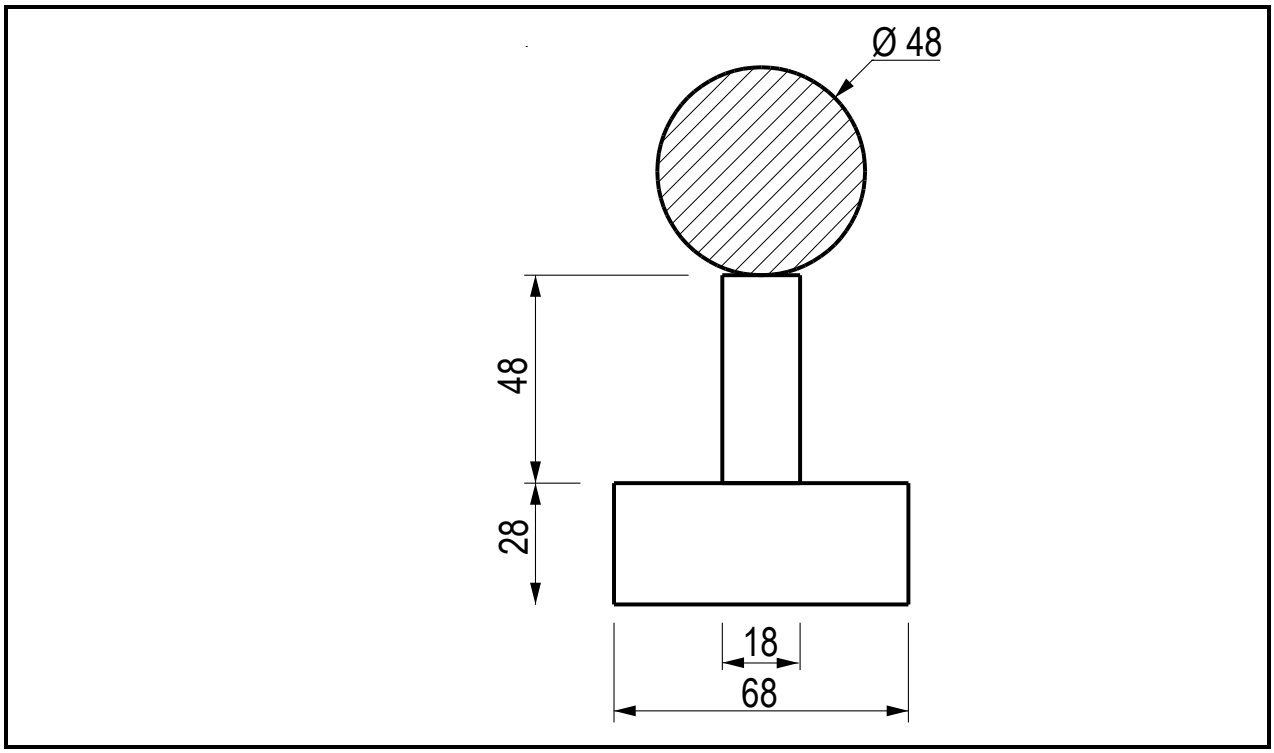

FIGURE 3

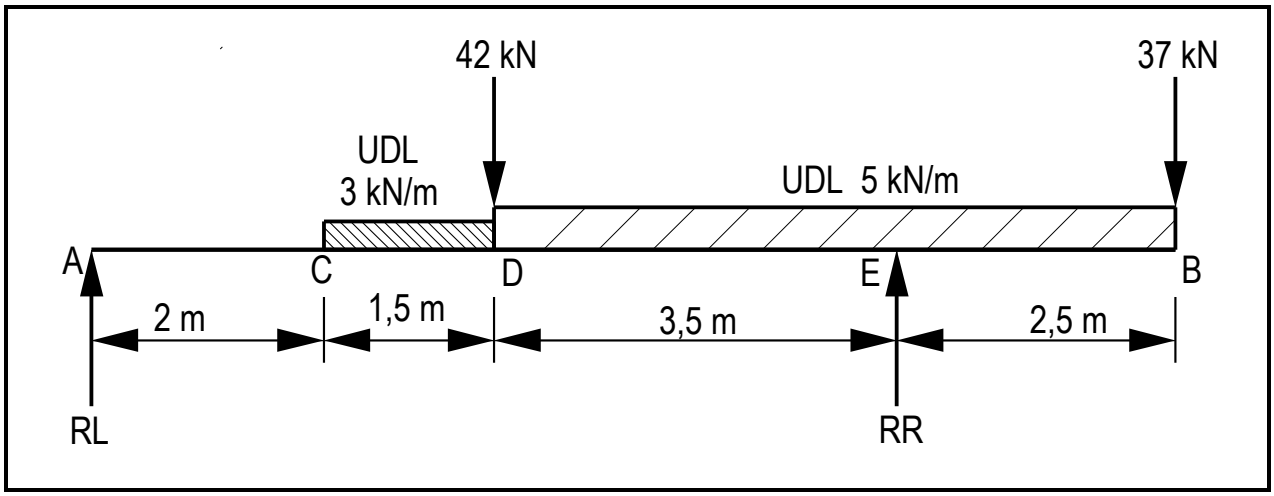

FIGURE 5

Copyright reserved

FORMULA SHEET

Any other applicable formula is also accepted.

$A = ½\ bh$

$A = \frac{\pi d^2}{4}$

$\sum CWM = \sum ACWM$

$\sum \uparrow F = \sum \downarrow F$

$Moment = force \times distance$

$BM = reaction\ moment - load\ moment$

$\frac{m}{I} = \frac{f}{y}$

$Z = \frac{I}{y}$

$I_{xx} = \frac{bd^3}{12}$

$I_{xx} = \frac{bd^3}{36}$

$I_{xx} = \frac{bd^3}{12} + al^2$

$F_s = A_s \times f_s \times n$

$F_t = A_t \times f_t \times n$

$F_c = A_c \times f_c \times n$

$A_s = \frac{\pi d^2}{4}$

$A_s = \frac{\pi(\emptyset - 0{,}9382\ p)^2}{4}$

$A_t = [(B \times T) - n\ (d \times t)]$

$A_c = (d \times t)$

$HC = F \times \cos\theta$

$R = \sqrt{VC^2 + HC^2}$

$VC = F \times \sin\theta$

$D = \frac{Mass}{Volume}$

$W = mass \times ga$

$Stress = \frac{Load}{Area}$

$Z = \frac{m}{f}$

$X = \frac{\sum Ax}{\sum A}$

$I_{yy} = \frac{db^3}{12}$

$I_{xx} = \frac{\pi D^4}{64}$

$I_{xx} = \frac{BD^3}{12} - \frac{bd^3}{12}$

Copyright reserved