higher education & training

Department:
Higher Education and Training
REPUBLIC OF SOUTH AFRICA

MARKING GUIDELINE

NATIONAL CERTIFICATE

BUILDING AND STRUCTURAL CONSTRUCTION N5

22 April 2021

This marking guideline consists of 9 pages.

Copyright reserved

QUESTION 1

SPACE DIAGRAM (1 mark)
Linear Scale 110 mm = 5,5 m

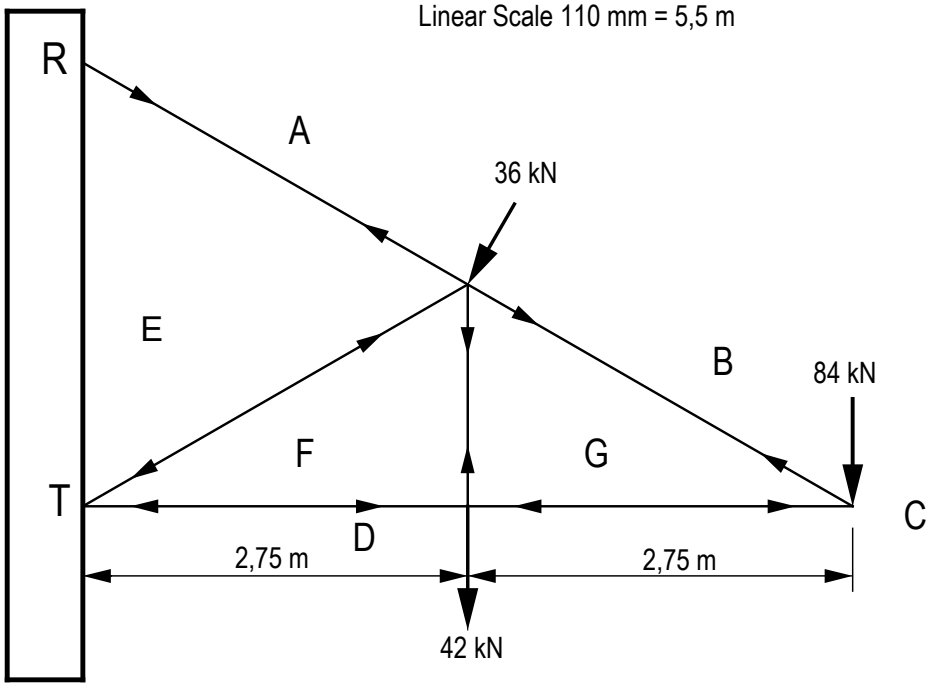

VECTOR DIAGRAM (1 mark)
Vector Scale 1 mm = 2 kN

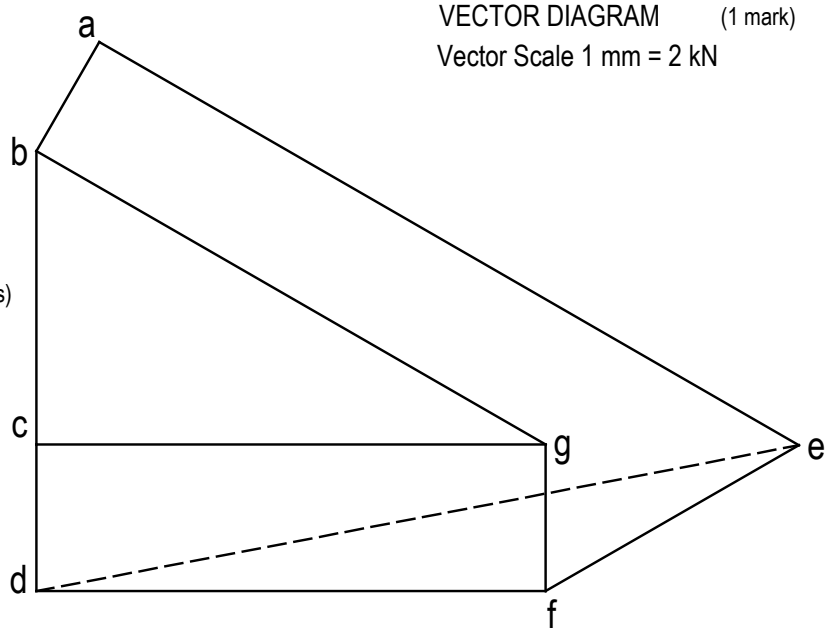

(3 marks)

T = de = 221,8 kN at 30º
R = ea = 231kN at 10,86º

(4 marks)

MEMBER	MAGNITUDE	TYPE
EA	231 kN	Tie
BG	168 kN	Tie
GC	145 kN	Strut
DF	145 kN	Strut
FG	42 kN	Tie
EF	83 kN	Strut

(6 marks)

[15]

QUESTION 2

2.1 Resistance of the bolts due to shearing:

$$\text{Stress} = \frac{\text{Load}}{\text{Area}}$$

$$\text{Force} = \text{Area} \times \text{Stress} \times \eta$$

$$= \frac{\pi(D - 0{,}9382P)^2}{4} \times 101 \times 6 \checkmark$$

$$= \frac{\pi(12 - 0{,}9382 \times 2)^2}{4} \times 101 \times 6 \checkmark$$

$$= 80{,}5 \times 101 \times 6$$

$$= 48{,}8 \text{ kN} \checkmark$$ (3)

2.2

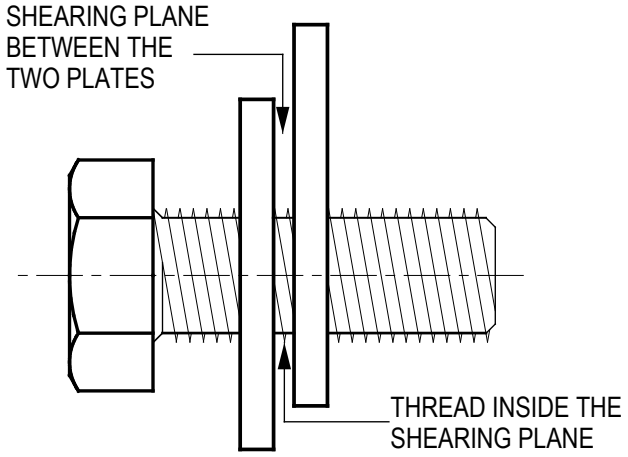

MARK ALLOCATION	
Drawing corr	1
shear plane indicated	2
Total	3

(3)

2.3

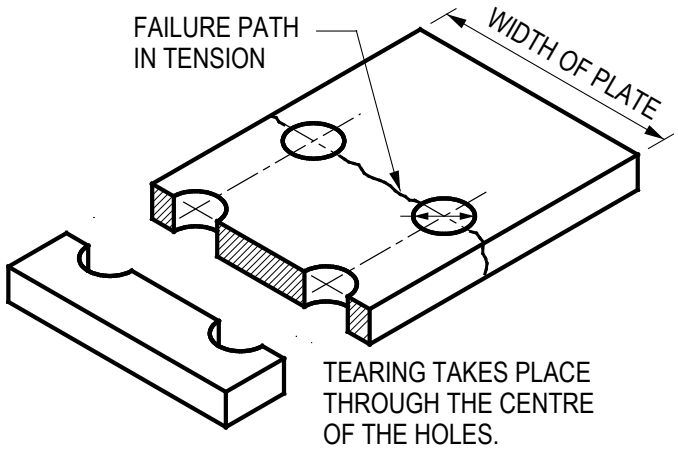

MARK ALLOCATION	
Drawing corr	1
Tearing plane indicated	2
Total	3

(3)
[9]

QUESTION 3

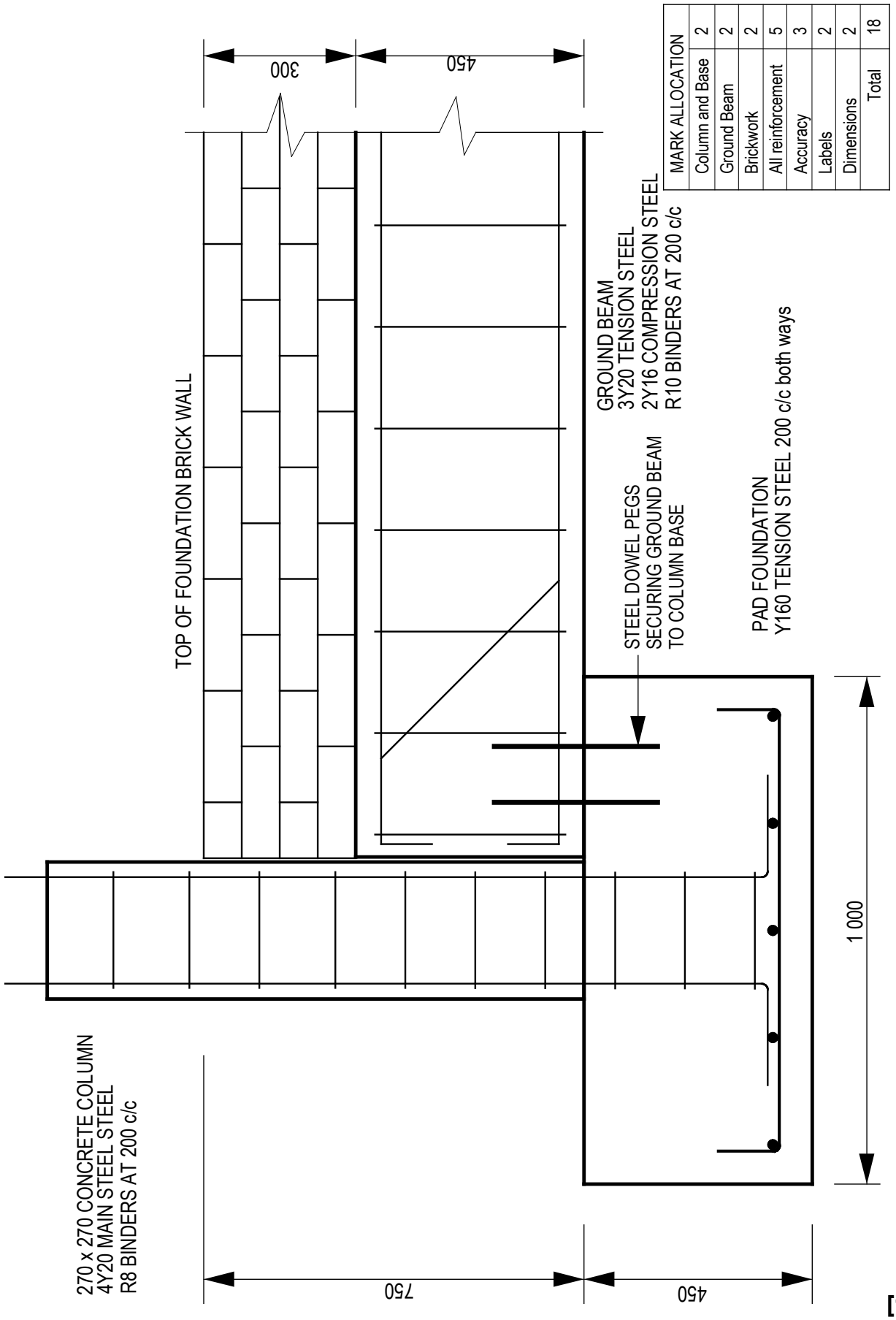

MARK ALLOCATION	
Column and Base	2
Ground Beam	2
Brickwork	2
All reinforcement	5
Accuracy	3
Labels	2
Dimensions	2
Total	18

[18]

QUESTION 4

4.1 Areas:

Area 1: $68 \times 28 = 1\,905$
Area 2: $48 \times 18 = 864$
Area 3: $\frac{\pi\, 48^2}{4} = 1\,809{,}6$
Total area $= 4\,577{,}6$✓

Neutral axis from A-B:

$4\,577 \times Y_1 = (1\,904 \times 14) + (864 \times 52) + (1\,809 \times 100)$✓✓
$Y_1 = \frac{26\,656 + 44\,928 + 180\,960}{4\,577{,}6}$
$Y_1 = 55{,}2$✓

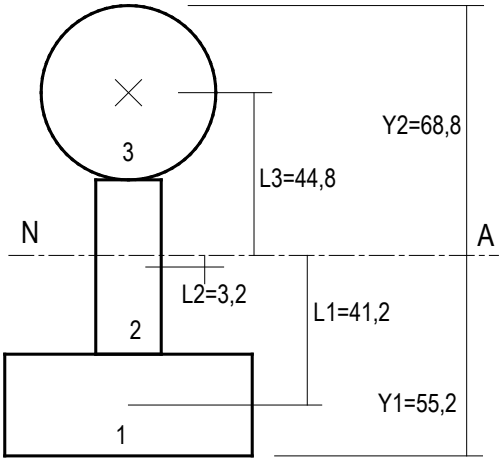

(4)

4.2 Second moment of area:

$I_{xx\,Total} = \left(\frac{bd^3}{12} + AL^2\right) + \left(\frac{bd^3}{12} + AL^2\right) + \left(\frac{\pi\, D^4}{64} + AL^2\right)$

$I_{xx\,1} = \left(\frac{68 \times 28^3}{12} + 68 \times 28 \times 41{,}2^2\right)$
$= (124\,394{,}7 + 3\,231\,925{,}8) = 3\,356\,320{,}4\ mm^4$✓✓

$I_{xx\,2} = \left(\frac{18 \times 48^3}{12} + 18 \times 48 \times 3{,}2^2\right)$
$= (165\,888 + 8\,847{,}4) = 174\,735{,}4\ mm^4$✓✓

$I_{xx\,3} = \left(\frac{\pi \times 48^4}{64} + \frac{\pi\, 48^2}{4} \times 44{,}8^2\right)$
$= (260\,576{,}3 + 3\,631\,854{,}0) = 3\,892\,430{,}3\ mm^4$✓✓

I_{xx} TOTAL $= 7\,423\,486{,}1\ mm^4$ ✓

(7)

4.3 Section modulus (Z) about the x-x axis:

$$Z = \frac{I}{Y}$$

$$Z = \frac{7\ 423\ 486{,}1\ mm4}{55{,}2\ mm} \checkmark$$

$$Z = 134\ 483{,}44\ mm^3 \checkmark$$

$$Z = 134{,}5 \times 10^{-6}\ m^3$$ (2)

4.4 Bending moment (bending stress = 154 MPa)

$$\frac{m}{I} = \frac{f}{Y}$$

$$M = \frac{7\ 423\ 486{,}1 \times 154}{55{,}2\ mm} \checkmark$$

$$M = 20\ 710\ 450{,}4\ N.mm$$

$$M = 20{,}7\ kN.m \checkmark$$ (2)

[15]

QUESTION 5

5.1

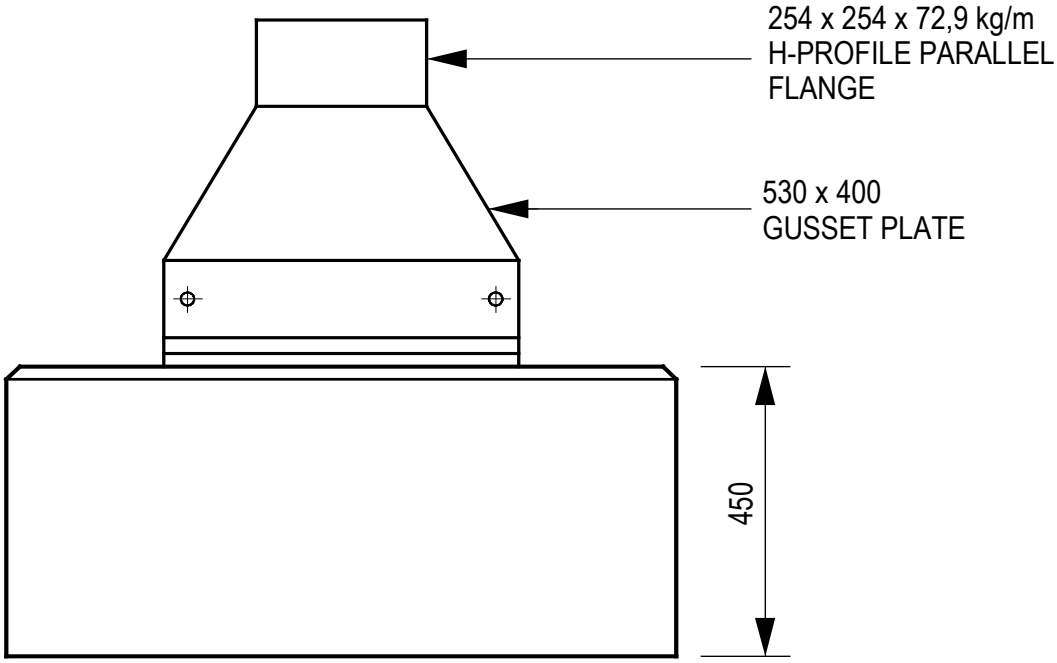

FRONT VIEW

5.2

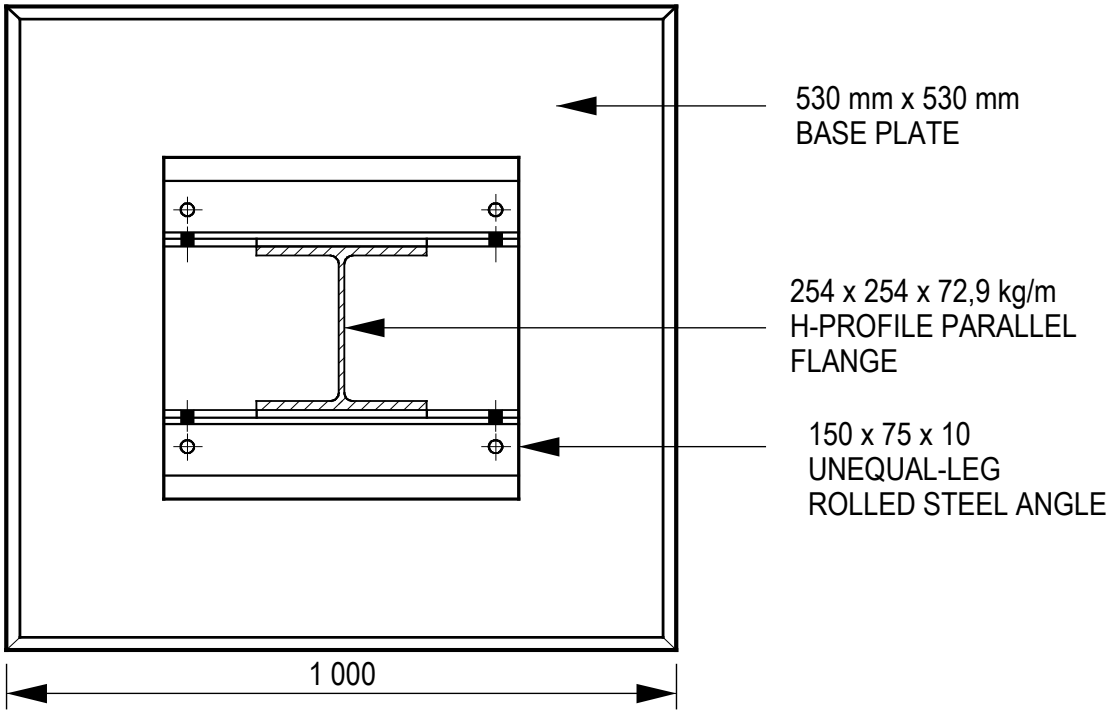

FRONT VIEW

MARK ALLOCATION					
Front view		Top view		Accuracy	2
Concrete base	2	Concrete base	2	Labels	2
Column	1	Column	1	Dimensions	1
Flange plate	1	Flange plate	1	Total	5
Angle	1	Angle	1		
Total	5	Total	5		

TOTAL = 15 marks

[15]

QUESTION 6

6.1 Take moments about RL:

$(RR \times 7) = (37 \times 9{,}5) + (5 \times 6 \times 6{,}5) + (42 \times 3{,}5) + (3 \times 1{,}5 \times 2{,}75)$✓

$$RR = \frac{(351{,}5 + 195 + 147 + 12{,}375)}{7}$$
$$= (\frac{705{,}875}{7})$$
$$= 100{,}84 \text{ kN}$$✓

Take moments about RR:

$(RL \times 7) + (37 \times 2{,}5) + (5 \times 2{,}5 \times 1{,}25)$
$= (3 \times 1{,}5 \times 4{,}25) + (42 \times 3{,}5) + (5 \times 3{,}5 \times 1{,}75)$✓

$$RL = \frac{(91{,}25 + 147 + 30{,}625) - (92{,}5 + 15{,}625)}{7}$$
$$= (\frac{196{,}75 - 108{,}125}{7})$$
$$= 12{,}66 \text{ kN}$$✓ (4)

6.2

SF A: 12,66 kN	12,66 kN✓
SF C: 12,66 kN	12,66 kN
SF D: 12,66 – (3 × 1,5)	8,16 kN✓
SF D: 12,66 – (3 × 1,5) – 42	-33,84 kN
SF E: 12,66 – (3 × 1,5) – 42 – (5 × 3,5)	-51,34 kN (max)✓
SF E: 12,66 – (3 × 1,5) – 42 – (5 × 3,5) + 100,84	49,50 kN✓
SF B: 12,66 – (3 × 1,5) – 42 – (5 × 2,5) + 100,84 – 37	37,00 kN✓ (5)

6.3

BM C: (12,66 × 2)	25,32 kN.m✓
BM D: (12,66 × 3,5) – (3 × 1,5 × 0,75)	40,94 kN.m✓
BM D: (12,66 × 7) – (3 × 1,5 × 4,25) – (42 × 3,5) – (5 × 3,5 × 1,75) (max)	-108,13 kN.m✓
OR	
BM D: -(37 × 2,5) – (5 × 2,5 × 1,25)	-108,13 kN.m (3)

6.4 $Ze = \frac{\text{B M max}}{\text{Stress}} = \frac{108{,}13 \times 10^6}{162} = 667\,469{,}14 \text{ mm}^3$✓

$Ze = 667{,}5 \times 10^{-6} \text{ m}^3$✓

Select: $254 \times 152 \times 59{,}2 = 5$ kg/m I-taper flange $(Ze = 669{,}2 \times 10^{-6})$✓ (3)

6.5 Shear stress $= \frac{\text{S F max}}{\text{D x } t_1} = \frac{51{,}34 \times 10^3}{254 \times 9{,}1} = 22{,}21$ MPa✓✓

$Ze = 22{,}21 < 100$ MPa✓ (3)
[18]

QUESTION 7

7.1 7.1.1

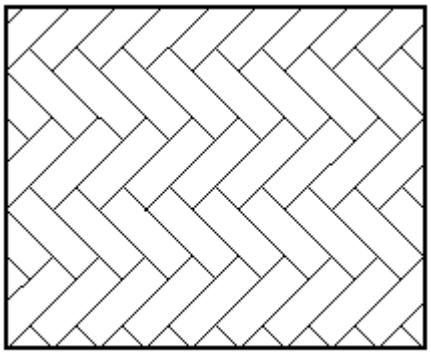

HERRINGBONE PATTERN

7.1.2

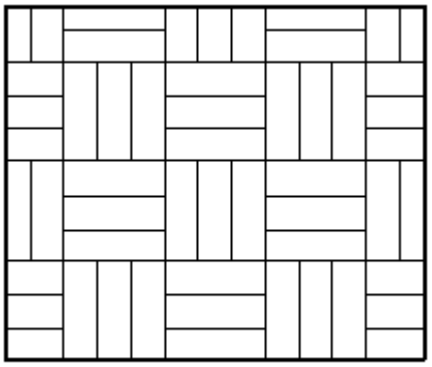

BASKET WEAVE PATTERN

MARK ALLOCATION	
150 mm Square corr	1
Pattern corr	2
Total	3
2 x 3 = 6 marks	

(2 × 3) (6)

7.2 7.2.1

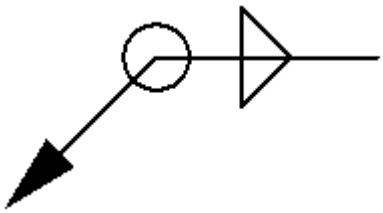

7.2.2

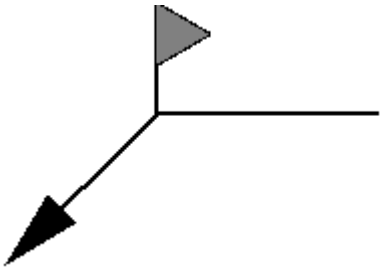

MARK ALLOCATION	
Symbol corr	1
Arrow indicated	1
Total	2
2 x 2 = 4 marks	

(2 × 2) (4)

[10]

TOTAL: 100

Copyright reserved