higher education & training

Department:
Higher Education and Training
REPUBLIC OF SOUTH AFRICA

MARKING GUIDELINE

NATIONAL CERTIFICATE

BUILDING AND STRUCTURAL CONSTRUCTION N5

17 April 2020

This marking guideline consists of 10 pages.

Copyright reserved

QUESTION 1

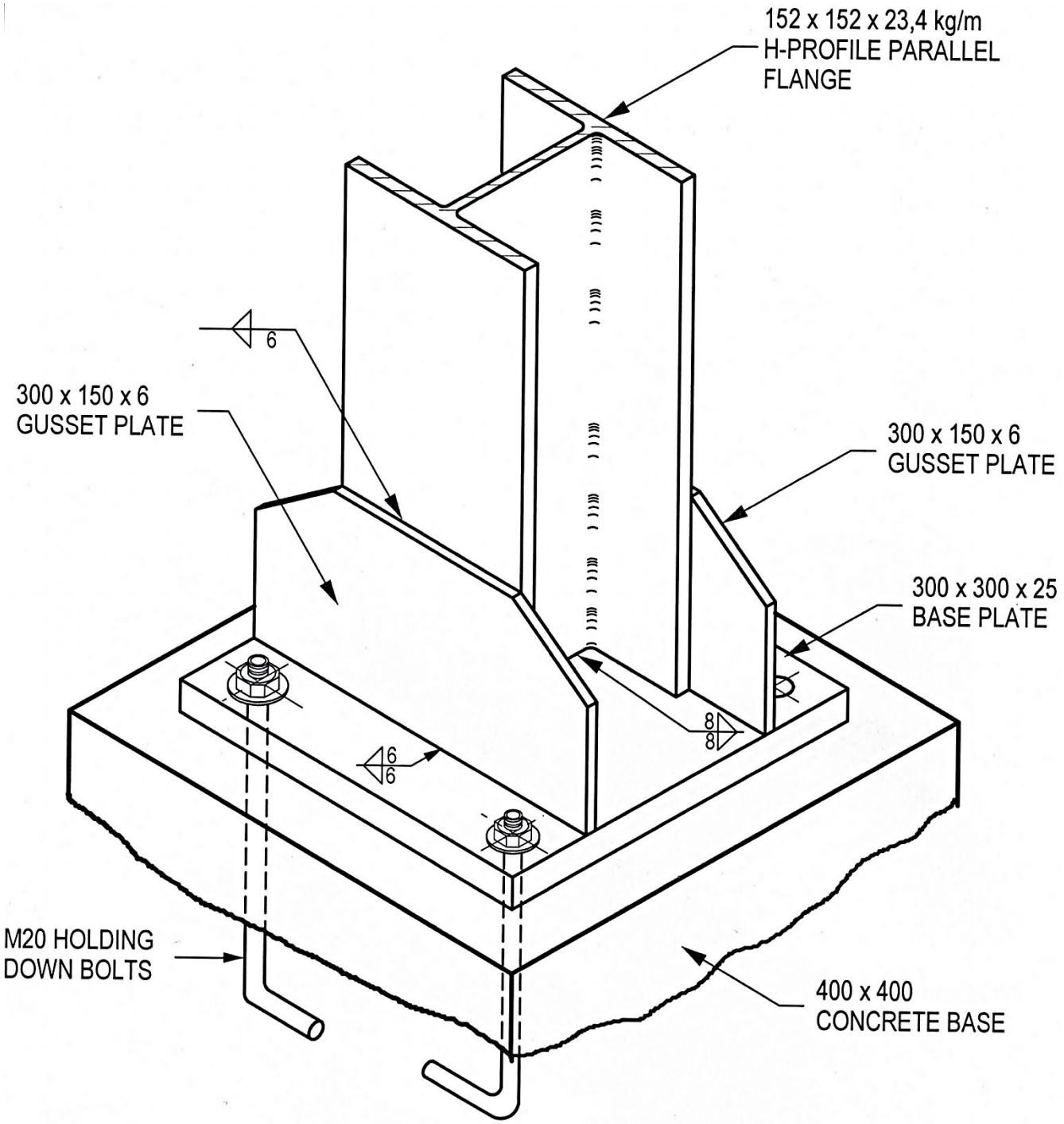

H-PROFILE STEEL STANCHION WELDED TO A BASE PLATE
SCALE 1:5

[18]

QUESTION 2

2.1

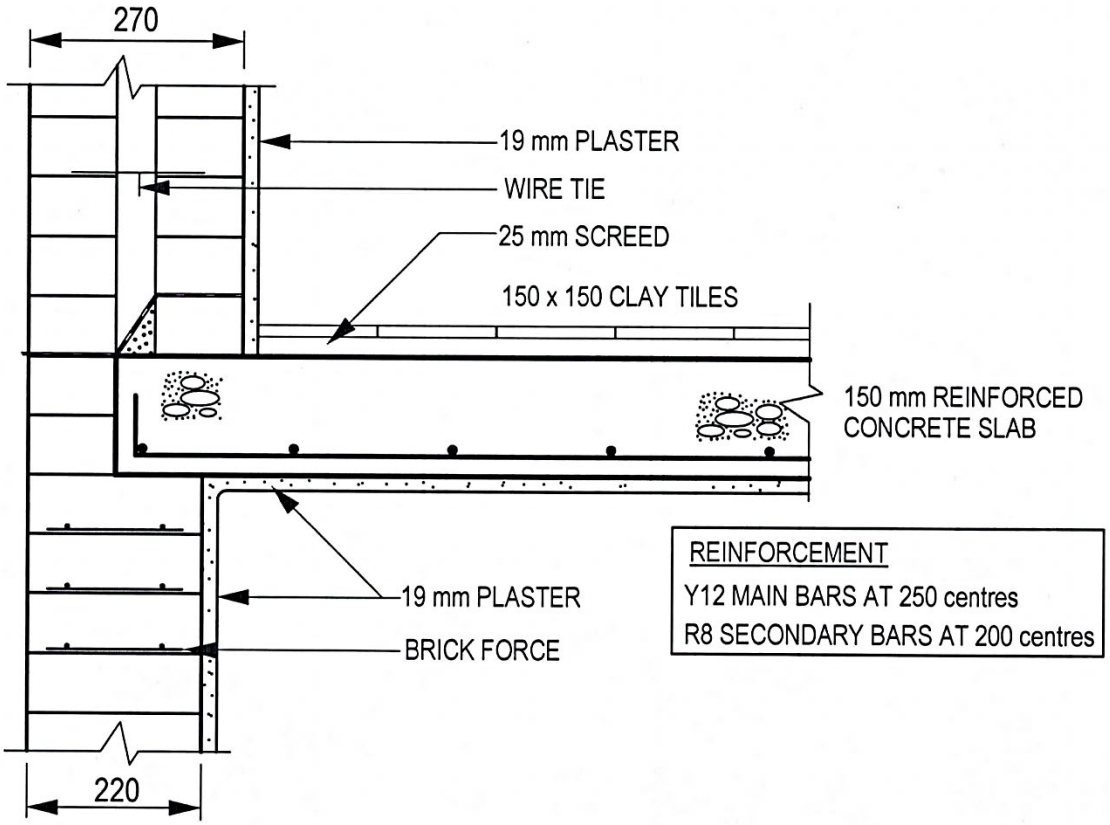

(12)

2.2

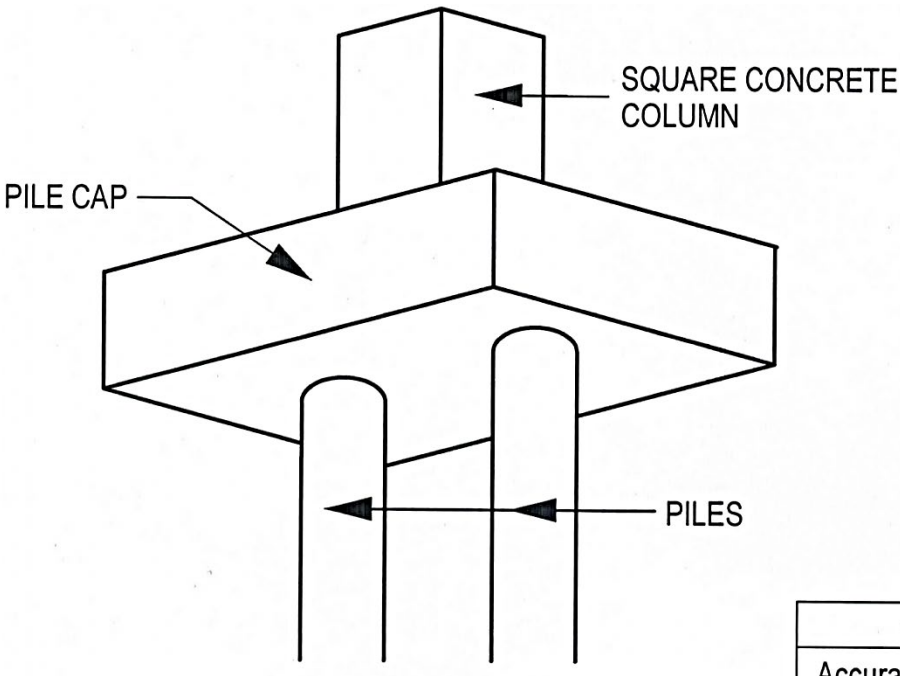

QUESTION 2.1
Accuracy: All parts in place 3 marks

(3)
[15]

QUESTION 3

QUESTION 3		
MARK ALLOCATION		9
Correctness		
Iso view	1	
RC floor	1	
Timber fillets	2	
Floor boards	2	
Skirting	1	
Wall & plaster	2	
Accuracy		2
Labels		1
Total		12

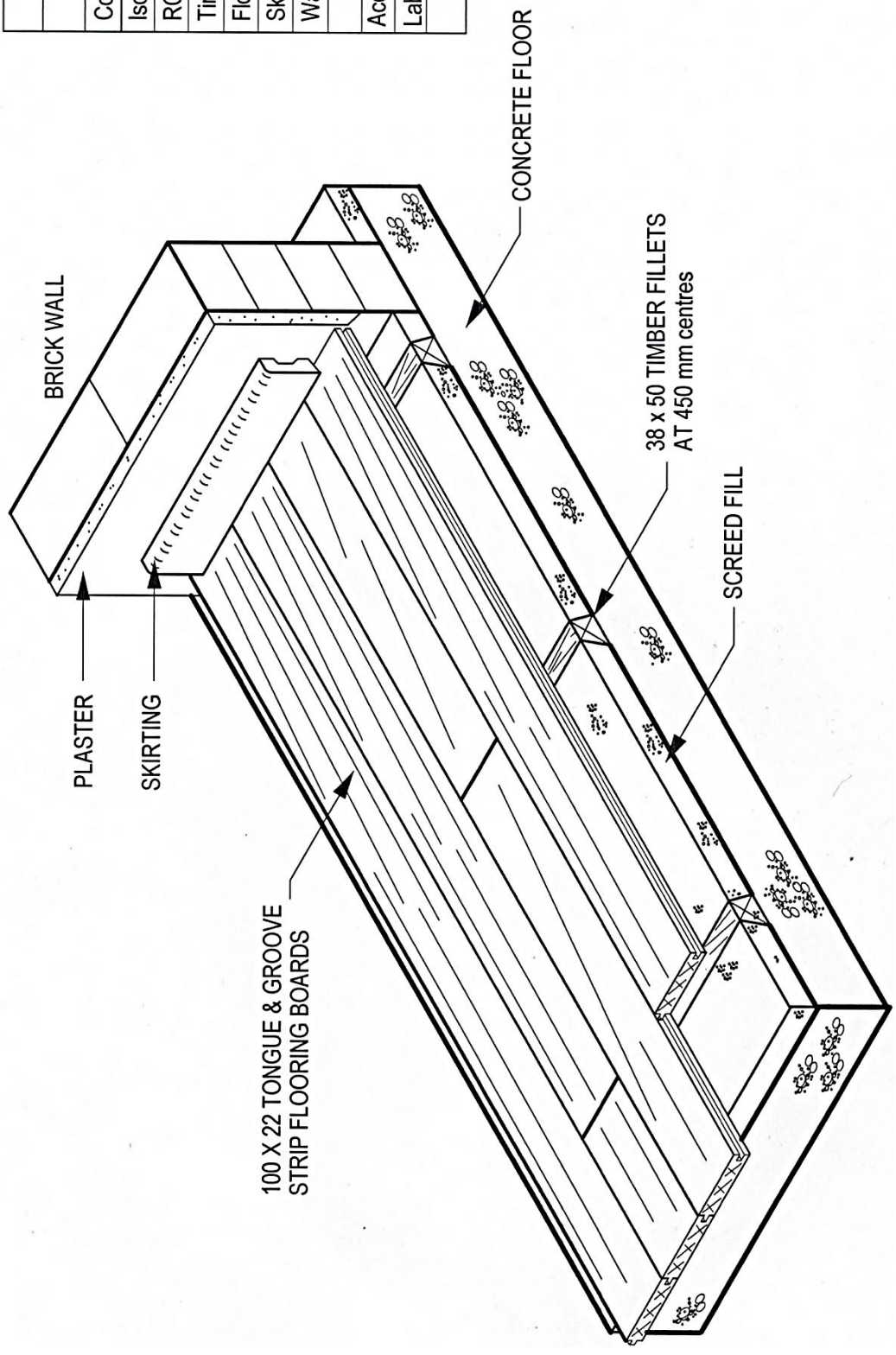

[12]

QUESTION 4

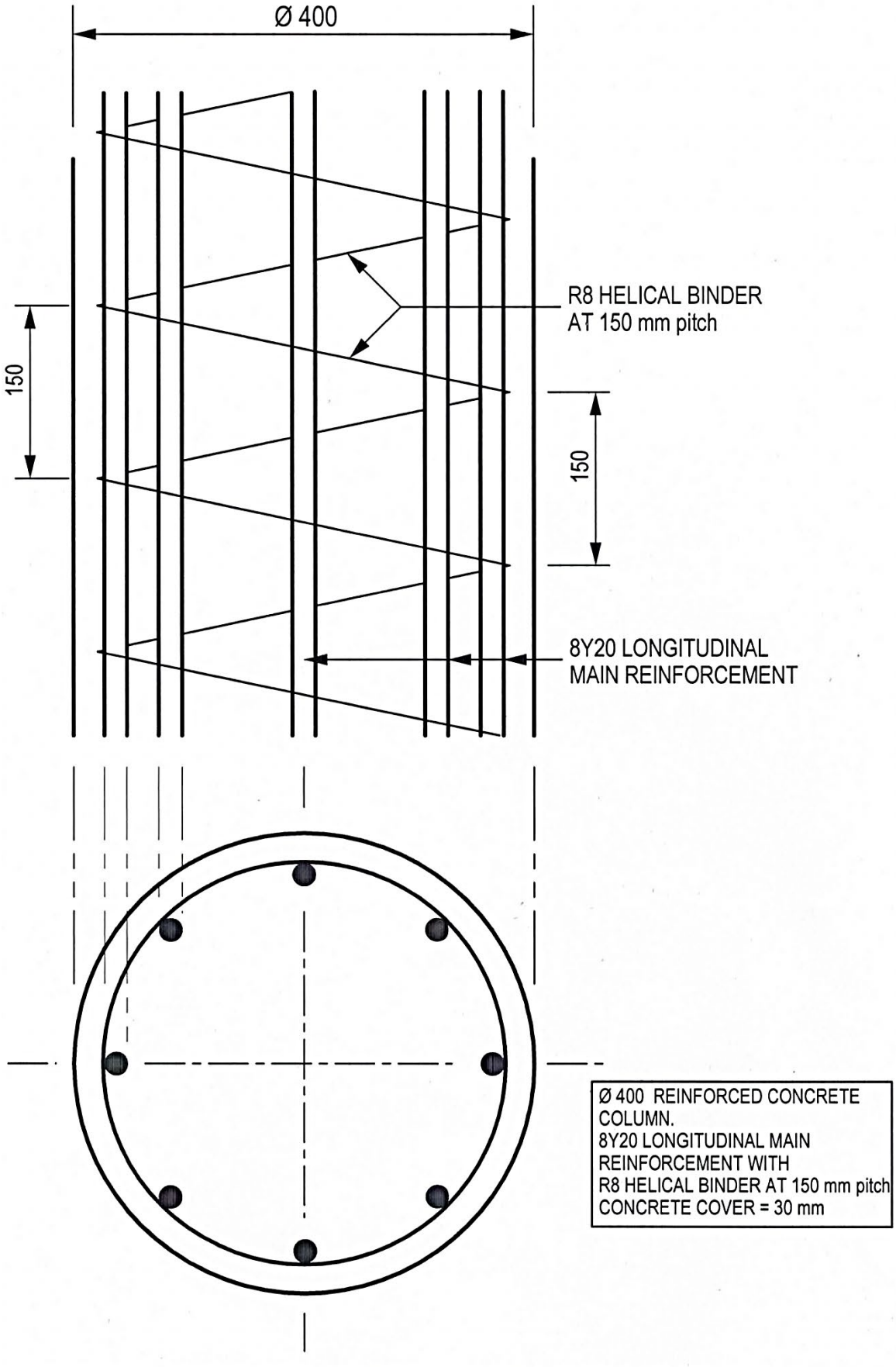

SECTIONAL FRONT VIEW AND TOP VIEW OF A CIRCULAR COLUMN
SCALE 1:5

[12]

QUESTION 5

5.1 Diameter of the bolt

Stress = Load/Area × n

$315\ \text{N/mm}^2 = \frac{96 \times 10^3}{(d \times t)3}$✓

$D = \frac{96 \times 10^3}{315 \times 8 \times 3}$✓✓

Diameter of bolt = 12,7 mm – use M16 bolts✓ (4)

5.2 Bearing stress

Stress = Load / Area × n

Bearing stress $= \frac{210 \times 10^3}{(d \times t)3}$✓

$= \frac{210 \times 10^3}{12 \times 8 \times 3}$✓ ✓

= 729,17 MPa✓ (4)

5.3 Force in tearing

Load = area × stress

$F_s = A_t \times f_t \times n$

Force in tearing $= [(B \times T) - n\ (d \times t)] \times f_t$

$= [(144 \times 8) - 3(18 \times 6)] \times 160\ \text{N/mm}^2$✓✓

$= [(1\ 152) - 3(108)] \times 160\ \text{N/mm}^2$

$= [1\ 152 - 324] \times 160\ \text{N/mm}^2$

$= 828 \times 160\ \text{N/mm}^2$✓

= 132,48 kN✓ (4)

[12]

QUESTION 6

6.1 Areas

Area 1: $30 \times 50 = 1\,500$

Area 2: $30 \times 50 = 1\,500$

Area 3: $120 \times 40 = 4\,800$

Area 4: $\frac{1}{2}\ 60 \times 69 = 2\,070$

Total area $= 9\,870$✓

Neutral axis from A–B

$9\,870 \times y_1 = 2(1\,500 \times 25) + (4\,800 \times 70) + (2\,070 \times 113)$✓✓

$Y_1 = \frac{75\,000 + 336\,000 + 233\,910}{9\,870}$✓

$Y_1 = \frac{644\,910}{9\,870}$

$Y_1 = 65{,}34$ mm✓ (5)

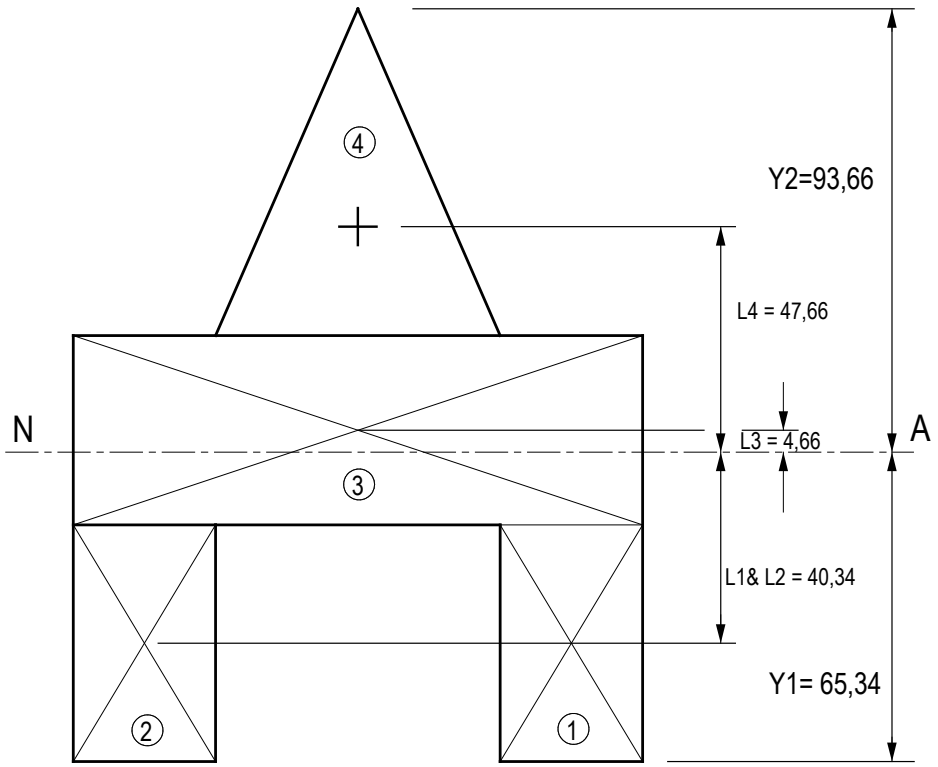

6.2 Second moment of area

$I_{xx\ Total} = 2\left(\frac{bd^3}{12} + AL^2\right) + \left(\frac{bd^3}{12} + AL^2\right) + \left(\frac{bd^3}{36} + AL^2\right)$

$I_{xx\ 1\&2} = 2\left(\frac{30 \times 50^3}{12} + 30 \times 50 \times 40{,}34^2\right)$

$= 2\ (312\ 500 + 2\ 440\ 973{,}3)$

$= 5\ 506\ 946{,}8\ mm^4$ ✓✓

$I_{xx\ 3} = \left(\frac{120 \times 40^3}{12} + 120 \times 40 \times 4{,}66^2\right)$

$= (640\ 000 + 104\ 234{,}88)$

$= 744\ 234{,}88\ mm^4$ ✓✓

$I_{xx\ 4} = \left(\frac{60 \times 69^3}{36} + ½\ 60 \times 69 \times 47{,}66^2\right)$

$= (547\ 515 + 4\ 701\ 954{,}49)$

$= 5\ 249\ 469{,}49\ mm^4$ ✓✓

$I_{xx\ Total} = 11\ 500\ 651{,}17\ mm^4$✓ (7)

6.3 Profile modulus (Z)

$Z = \frac{I}{Y}$

$= \frac{11\ 500\ 651{,}17\ mm4}{65{,}34\ mm}$✓

$= 176\ 012{,}41\ mm^3$✓

$= 176{,}01 \times 10^{-6}\ m^3$ (2)

6.4 Select suitable I-Taper flange beam

Use $203 \times 102 \times 25{,}3$ kg/m ($Ze = 226{,}1 \times 10^{-6}\ m^3$)✓ (1)
[15]

QUESTION 7

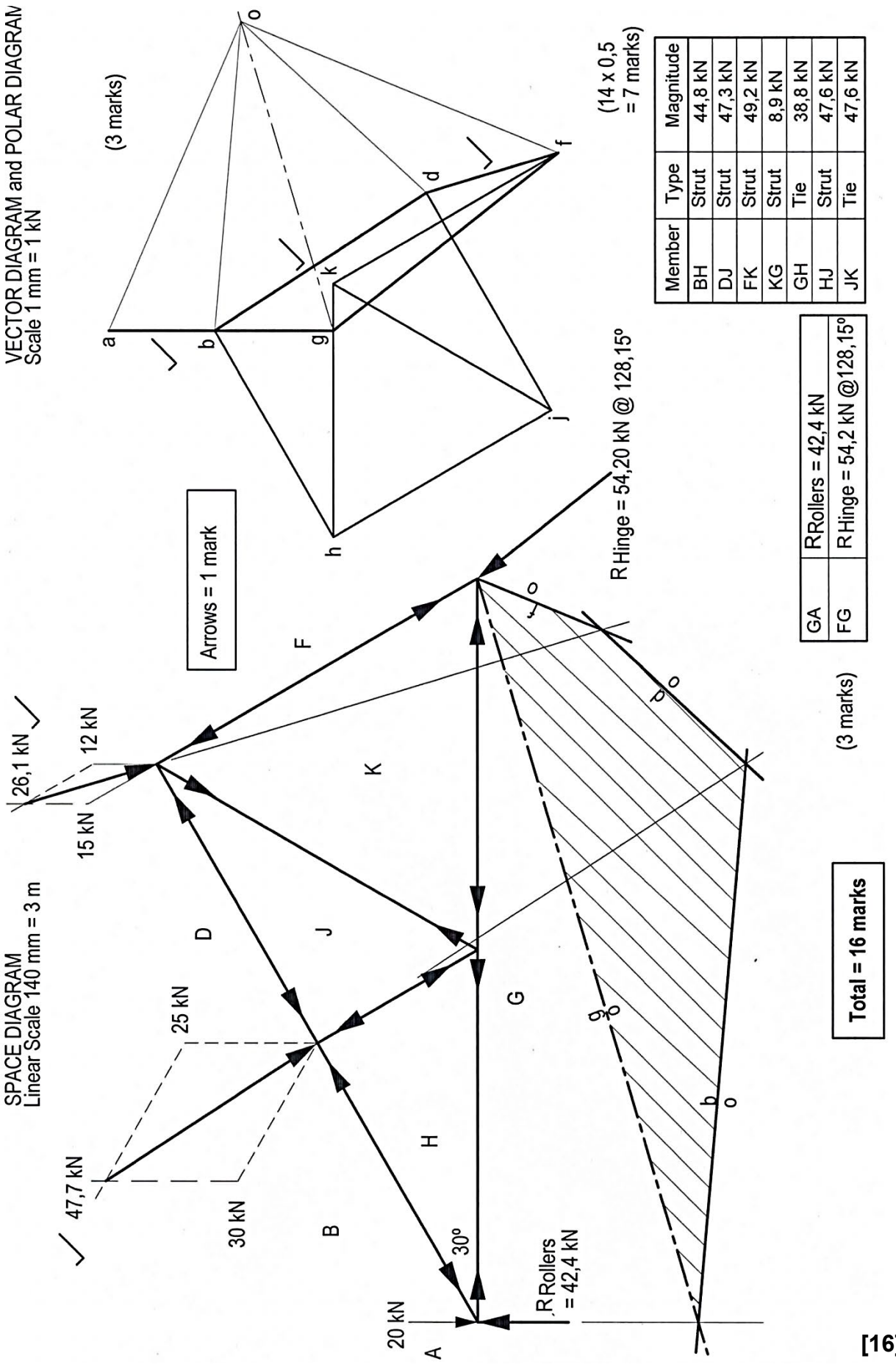

Member	Type	Magnitude
BH	Strut	44,8 kN
DJ	Strut	47,3 kN
FK	Strut	49,2 kN
KG	Strut	8,9 kN
GH	Tie	38,8 kN
HJ	Strut	47,6 kN
JK	Tie	47,6 kN

GA	RRollers = 42,4 kN
FG	R Hinge = 54,2 kN @128,15°

MARK SHEET

BUILDING AND STRUCTURAL CONSTRUCTION N5

QUESTION 1		
MARK ALLOCATION		
Correctness:		9
Iso view corr.	1	
Column	2	
Base Plate	1	
Gussets	2	
2 Bolts	2	
Concrete base	1	
Accuracy		4
Weld symbols		2
Lables		2
Title		1
Total		18

NOTE:
Column and base plate must be centralised on the concrete base

QUESTION 2.1		
MARK ALLOCATION		
CORRECTNESS:		9
Brick walls corr.	2	
RC Slab	1	
Reinforcement	2	
Floor finishes	2	
Plaster	2	
Accuracy		2
Labels		1
Total		12

QUESTION 4		
MARK ALLOCATION		
Correctness:		7
Top view	1	
Sectional view	2	
All reinforcement	4	
Accuracy		
Dimensions		2
Labels		2
Total		1
		12

TOTAL: 100

Copyright reserved