higher education & training

Department:
Higher Education and Training
REPUBLIC OF SOUTH AFRICA

T140**(E)**(A12)T

NATIONAL CERTIFICATE

BUILDING AND STRUCTURAL CONSTRUCTION N5

(8060015)

12 April 2018 (X-Paper)
09:00–13:00

OPEN-BOOK EXAMINATION

REQUIREMENTS: **Hot-rolled steel sections (BOE 8/2)**
Answer book (8/13)
A2 drawing sheet

Nonprogrammable calculators may be used.

This question paper consists of 6 pages, 1 diagram sheet and 1 formula sheet.

Copyright reserved

DEPARTMENT OF HIGHER EDUCATION AND TRAINING
REPUBLIC OF SOUTH AFRICA

NATIONAL CERTIFICATE
BUILDING AND STRUCTURAL CONSTRUCTION N5
TIME: 4 HOURS
MARKS: 100

INSTRUCTIONS AND INFORMATION

1. Answer ALL the questions.
2. Read ALL the questions carefully.
3. Number the answers according to the numbering system used in the question paper.
4. QUESTIONS 1.1; 2; 3 and 6 must be done on the supplied DRAWING SHEET. QUESTIONS 1.2; 4 and 5 must be done in the ANSWER BOOK.
5. ALL drawings must be done in pencil with bold outlines.
6. The drawings must be done in accordance with National Standards and be fully labelled with descriptive notes and dimensions (where applicable).
7. ALL calculations must conform to the relevant SABS/SANS Codes of Practice.
8. Write neatly and legibly.

Copyright reserved

QUESTION 1

1.1 Show the difference between the following types of staircases by drawing the top views of each:

1.1.1 Open-well staircase

1.1.2 Closed-well staircase

(2 × 3) (6)

Each drawing must show the upward direction of the staircase. Draw each drawing within a 150 mm × 150 mm square.

1.2 Name and describe each of the following types of welding symbols:

1.2.1

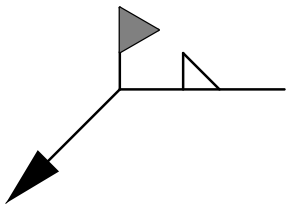

1.2.2

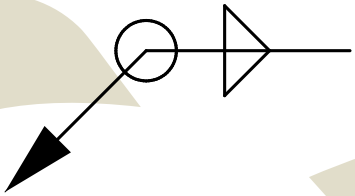

(2 × 2) (4)
[10]

QUESTION 2

FIGURE 1 on the DIAGRAM SHEET (attached) shows a cantilever roof truss that will be erected at a bus stop. The truss will be bolted to a wall.

Use the graphical method to determine the following:

2.1 The magnitude and direction of the forces in each of the members to distinguish between tension (ties) and compression (struts)

2.2 The magnitude and direction of the reactions at P and Q

Use the following scales: Space diagram: 15 mm = 1 m
Vector diagram: 1 mm = 2 kN

This question must be done on the A2 DRAWING SHEET (attached). Tabulate the answers. **[14]**

QUESTION 3

A simply supported reinforced concrete beam is 550 mm deep and 450 mm wide. The concrete beam will be built 330 mm into a two-brick thick wall.

Draw, to scale 1 : 10, the following:

3.1 A vertical longitudinal section through the concrete beam and wall showing approximately 1 750 mm of the beam

3.2 A cross-sectional view of the concrete beam to show the position of the steel reinforcement, as well as the bent-up bar

Use the following reinforcement:

Main steel: 3Y20 tensile bars, evenly spaced; the centre bar is cranked upwards at an angle of 45º to compensate for shearing force

Top steel: 3R16 compression bars

Binders: The first FIVE Y8 binders must be spaced at 150 mm centres and the next FOUR binders at 200 centres

Reinforcement cover: 35 mm

The completed drawing must include ALL labels, dimensions, steel codes and key symbols (wall). **[14]**

QUESTION 4

FIGURE 2 on the next page shows a steel beam loaded with TWO point loads and TWO uniformly distributed loads. The beam has a 1,5 m overhang on the right-hand side.

Answer each of the following questions with regard to the loaded beam:

4.1 Calculate the reaction at RL and RR. (4)

4.2 Calculate and draw the shear force diagram. Insert ALL values on the diagram. (6)

4.3 Calculate and draw the bending moment diagram. Insert the value of the bending moment maximum on the diagram. (8)

4.4 Calculate the maximum section modulus for the loaded beam. (2)

4.5 Select from the structural steel tables a suitable I-section with parallel flanges for the loaded beam. (1)

4.6 Calculate the maximum shear stress in the chosen steel beam. (3)

Copyright reserved

Use the following scales:

Load diagram: 150 mm = 9,5 m

Shear force: 1 mm = 1 kN

Bending moment: 1 mm = 1 kN.m

The permissible bending stress for grade 43 mild steel is 156 MPa. The maximum shear stress must not exceed 100 MPa.

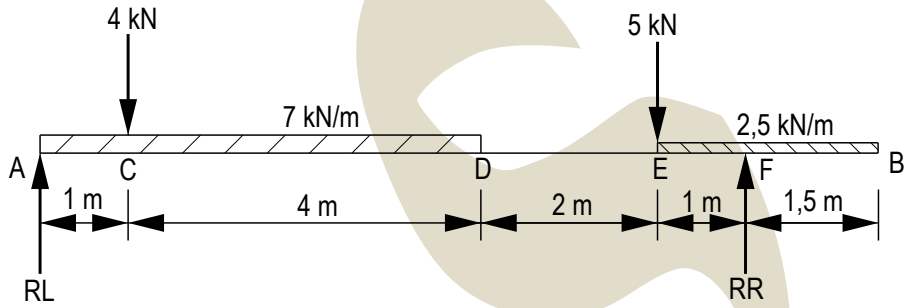

FIGURE 2 **[24]**

QUESTION 5

FIGURE 3 shows a U-shaped figure to be used as a gutter.

Calculate:

5.1 The distance of the neutral axis about the x-x axis from AB (4)

5.2 The second moment of area (7)

5.3 The profile modulus about the x-x axis (3)

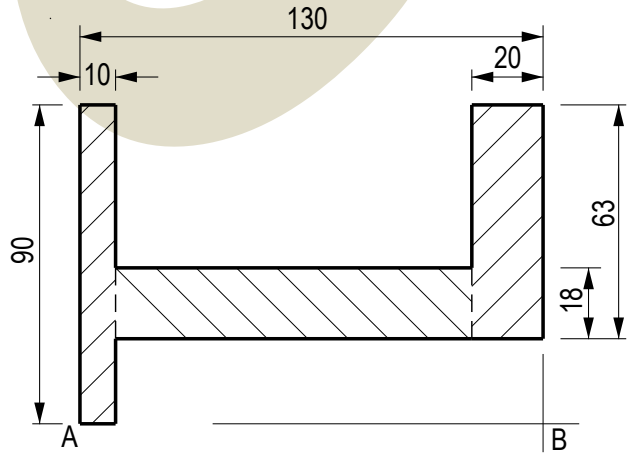

FIGURE 3 **[14]**

QUESTION 6

FIGURE 4 on the DIAGRAM SHEET (attached) shows an exploded view of a secondary steel beam connected to a main beam to form part of a mezzanine floor for a factory.

The rolled-steel angle cleats of 80 × 80 × 10 mm must be fixed to the web of the main beam with 3 × 20 mm diameter snap head rivets and with a 6 mm fillet weld to the web of the secondary beam. The top of the TWO beams must be level and in-line with each other.

Draw, to scale 1 : 5, TWO vertical sections through:

6.1 The main beam as seen in the direction of arrow A

6.2 The secondary beam as seen in the direction of arrow B

Clearly show ALL labels and welding symbols. **[24]**

TOTAL: 100

Copyright reserved

DIAGRAM SHEET

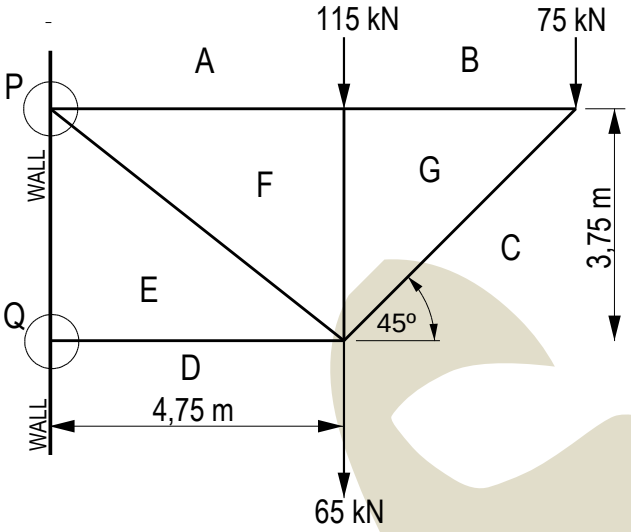

FIGURE 1

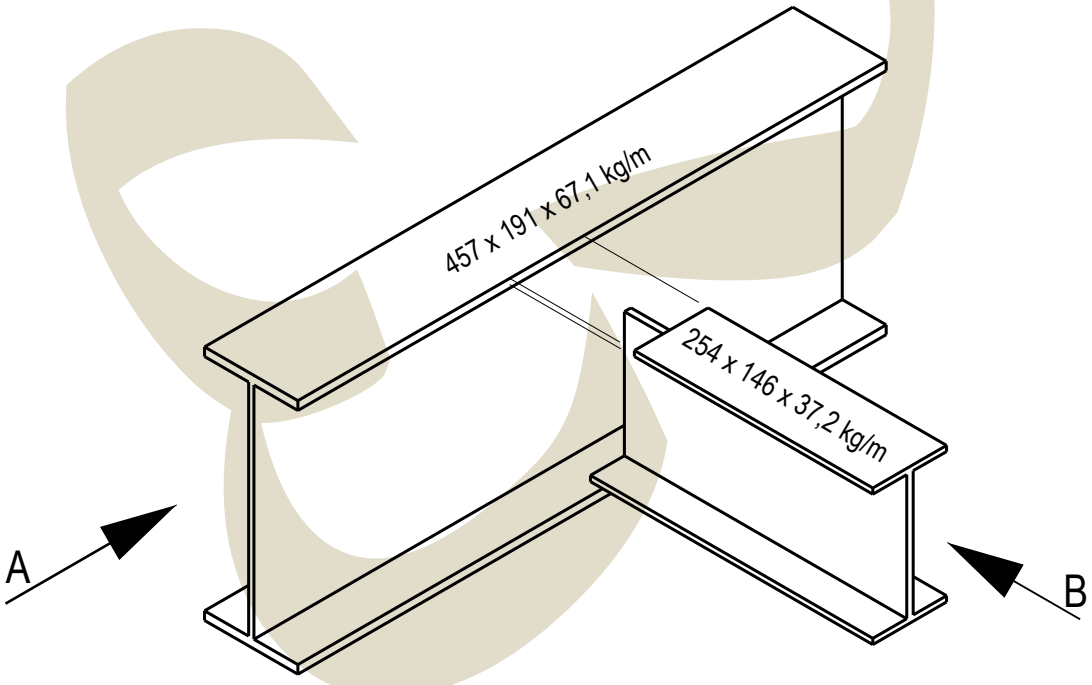

FIGURE 4

Copyright reserved

FORMULA SHEET

Any other applicable formula is also accepted.

$A = ½\ bh$

$A = \frac{\pi d^2}{4}$

$\sum CWM = \sum ACWM$

$\sum \uparrow F = \sum \downarrow F$

$Moment = Force \times distance$

$BM = Reaction\ moment - Load\ moment$

$\frac{m}{I} = \frac{f}{y}$

$Z = \frac{I}{y}$

$I_{xx} = \frac{bd^3}{12}$

$I_{xx} = \frac{bd^3}{36}$

$I_{xx} = \frac{bd^3}{12} + al^2$

$F_s = A_s \times f_s \times n$

$F_t = A_t \times f_t \times n$

$F_c = A_c \times f_c \times n$

$A_s = \frac{\pi d^2}{4}$ $\quad A_s = \frac{\pi(\emptyset - 0{,}9382\ p)^2}{4}$

$A_t = [(B \times T) - n\ (d \times t)]$

$A_c = (d \times t)$

$HC = F \times \cos\theta$

$R = \sqrt{VC^2 + HC^2}$

$VC = F \times \sin\theta$

$D = \frac{Mass}{Volume}$

$W = mass \times ga$

$Stress = \frac{Load}{Area}$

$Z = \frac{m}{f}$

$X = \frac{\sum Ax}{\sum A}$

$I_{yy} = \frac{db^3}{12}$

$I_{xx} = \frac{\pi D^4}{64}$

$I_{xx} = \frac{BD^3}{12} - \frac{bd^3}{12}$

Copyright reserved