higher education & training

Department:
Higher Education and Training
REPUBLIC OF SOUTH AFRICA

MARKING GUIDELINE

NATIONAL CERTIFICATE

BUILDING AND STRUCTURAL CONSTRUCTION N5

12 APRIL 2018

This marking guideline consists of 13 pages.

Copyright reserved

QUESTION 1

1.1

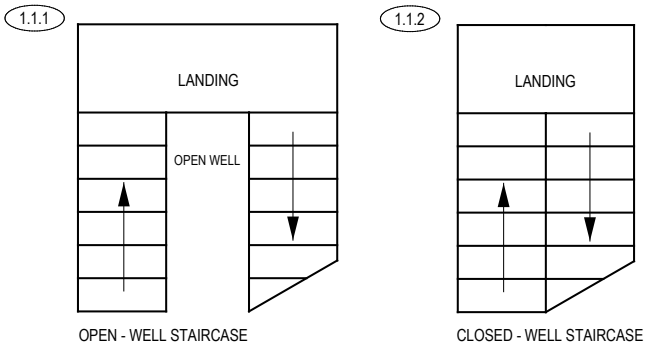

Correct view.	1
Arrow in place	1
Label	1
Total	3
Total 2 x 3 = 6	

(2 × 3) (6)

1.2 1.2.1

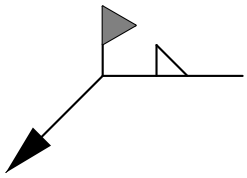

Fillet weld
Welded on the other side and on site

1.2.2

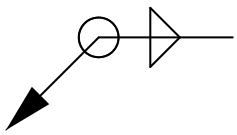

Fillet weld
Welded on both sides and all-round

(2 × 2) (4)
[10]

QUESTION 2

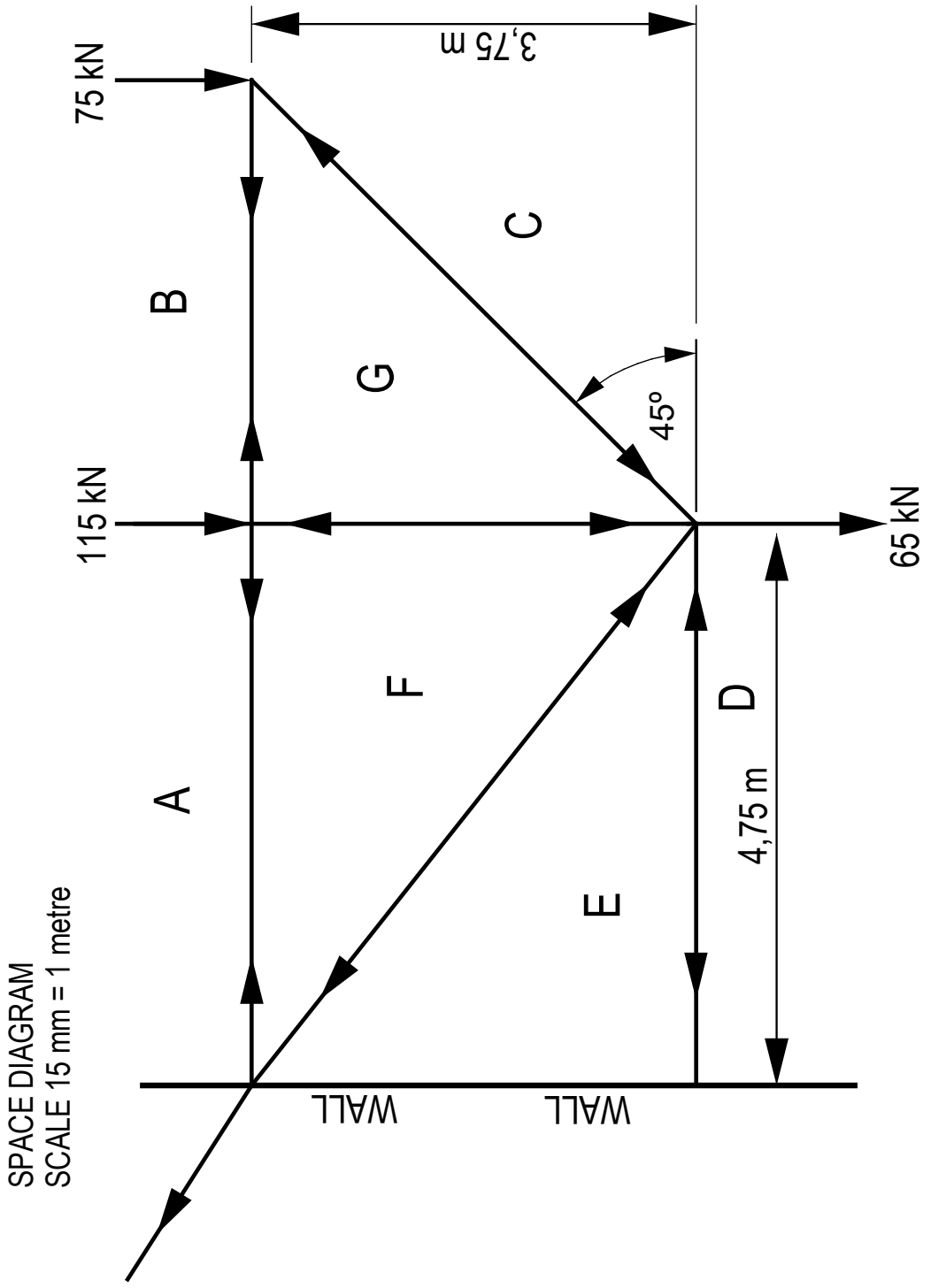

[14]

QUESTION 3

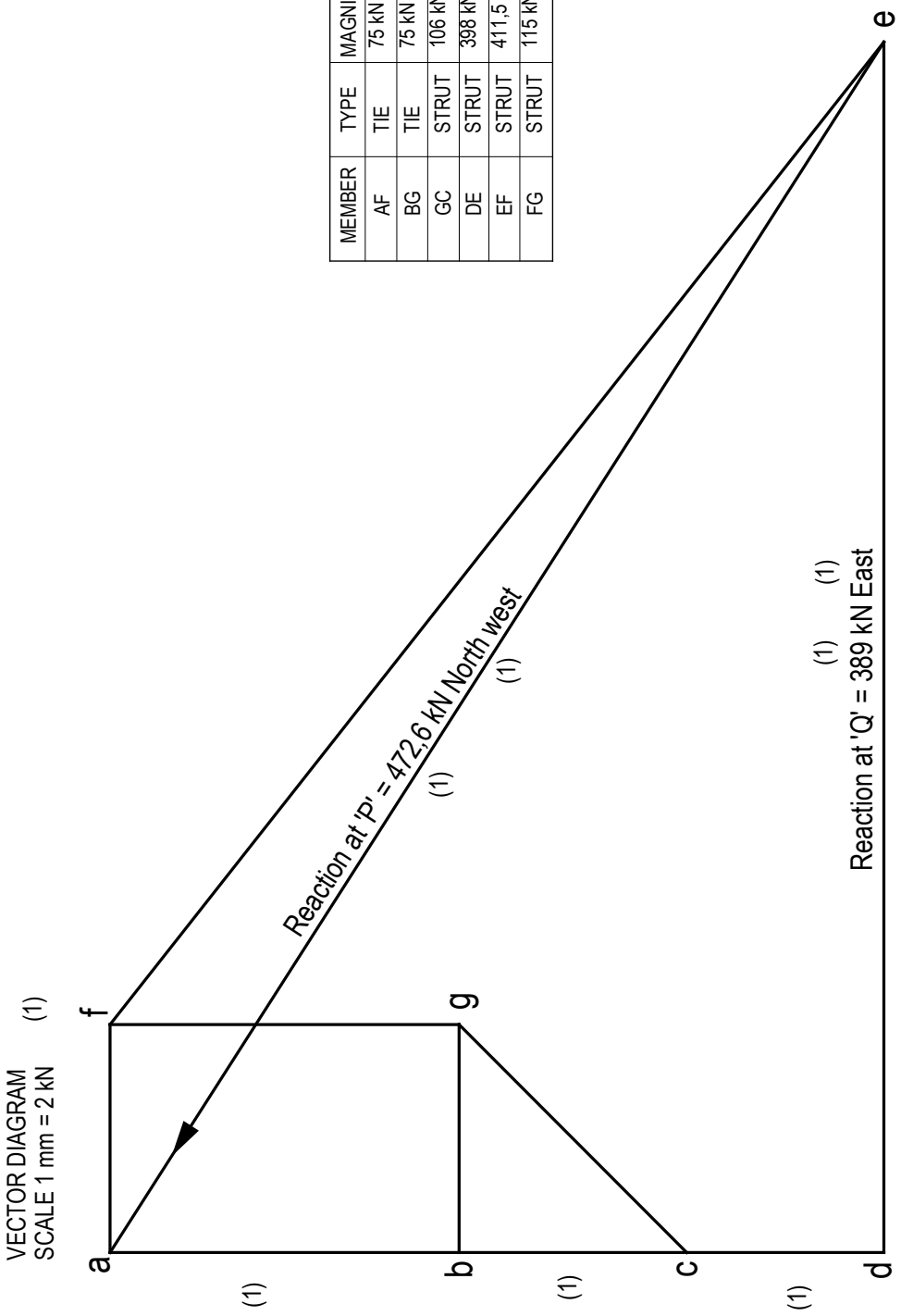

MEMBER	TYPE	MAGNITUDE	
AF	TIE	75 kN	(1)
BG	TIE	75 kN	(1)
GC	STRUT	106 kN	(1)
DE	STRUT	398 kN	(1)
EF	STRUT	411,5 kN	(1)
FG	STRUT	115 kN	(1)
			[6]

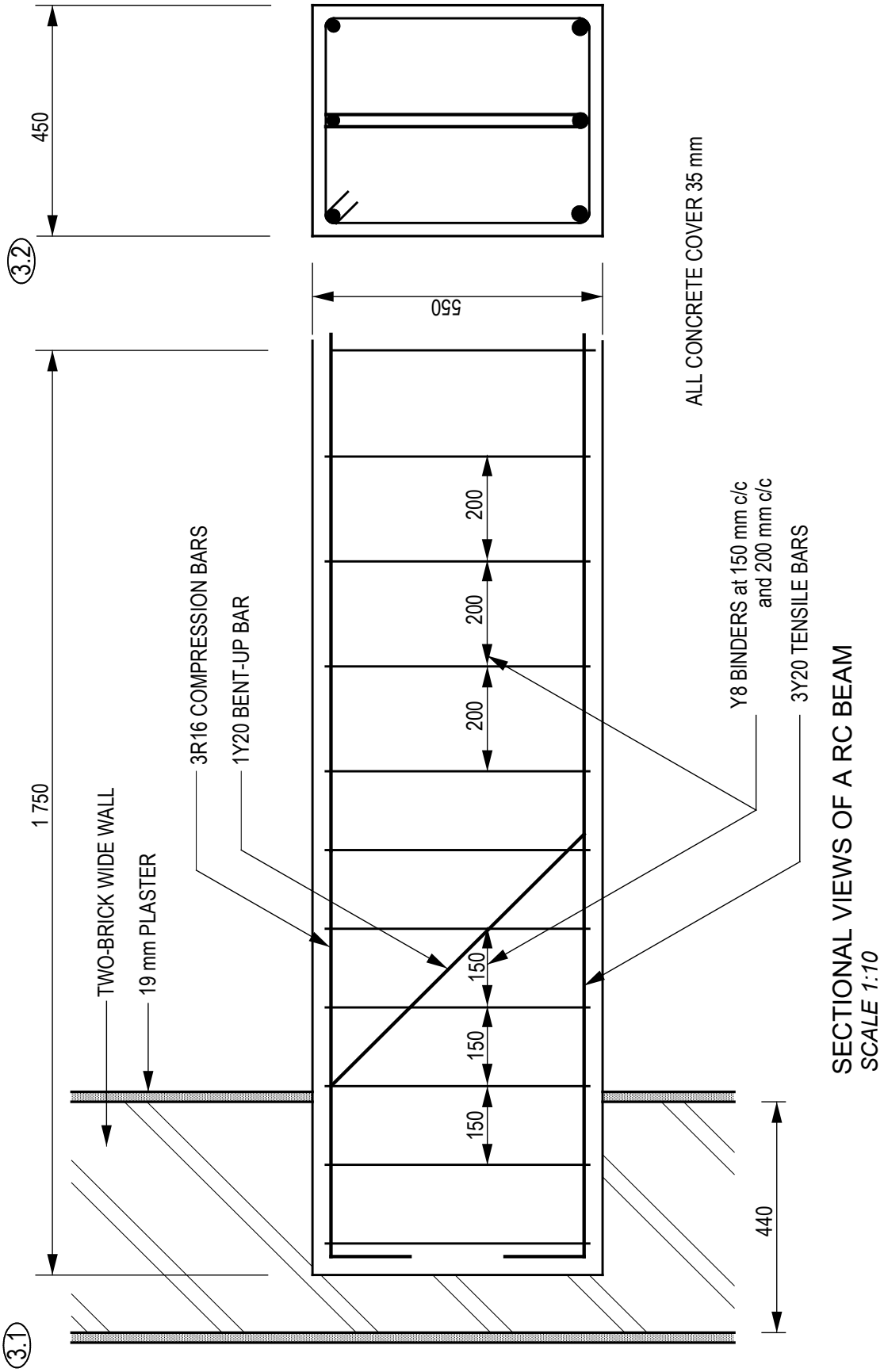

SECTIONAL VIEWS OF A RC BEAM
SCALE 1:10

MARK ALLOCATION QUESTION 3

CORRECTNESS	
Correctness:	
Beam corr size	2
Wall in place	2
Beam on wall corr	1
Sectional view in place	2
Plaster	2
	9

REINFORCEMENT	
Reinforcement:	
Main steel	3
Compression steel	2
Binders (all)	4
Bent-up bar	1
	10

Accuracy	3
Hatching	2
Labels	2
Dimensions	2
Title	9

Total = 9 + 10 + 9
= 28 marks / 2

TOTAL = 14 Marks

[14]

QUESTION 4

Calculate reactions

4.1

Take moments about RL:

(RR × 8) = (2,5 × 2,5 × 8,25) + (5 × 7) + (7 × 5 × 2,5) + (4 × 1)✓

$$RR = \frac{51,56 + 35 + 87,5 + 4}{8}$$

RR = 22,26 kN✓

Take moments about RR:

(RL × 8) + (2,5 × 1,5 × 0,75) = (7 × 5 × 5,5) + (4 × 7) + (5 × 1) + (2,5 × 1 × 0,5)✓

$$RL = \frac{192,5 + 28 + 5 + 1,25 - 2,81}{8}$$

RL = 27,99 kN✓ (4)

Calculate shear force values

4.2

SF A: 27,99 kN **(Max)**	27,99 kN✓
SF C: 27,99 – (7 × 1)	20,99 kN✓
SF C: 27,99 – (7 × 1) – 4	16,6 kN
SF D: 27,99 – (7 × 5) – 4	-11,01 kN✓
SF E: 27,99 – (7 × 5) – 4	-11,01 kN
SF E: 27,99 – (7 × 5) – 4 – 5	-16,01 kN
SF F: 27,99 – (7 × 5) – 4 – 5 – (2,5 × 1)	-18,5 kN
SF F: 27,99 – (7 × 5) – 4 – 5 – (2,5 × 1) + 22,25	3,75 kN

(3)

Shear force diagram = 3 marks	

(3)

Calculate bending moment values

4.3

BM C: (27,99 × 1) – (7 × 1 × 0,5)	24,49 kN.m✓
BM D: (27,99 × 5) – (7 × 5 × 2,5) – (4 × 4)	36,45 kN.m✓
BM E: (27,99 × 7) – (7 × 5 × 4,5) – (4 × 6)	14,43 kN.m✓
BM F: -(2,5 × 1,5 × 0,75)	-2,81 kN.m✓

(4)

Bending moment where shear force = zero (refer to diagram for calculation) BM R: (27,99 × 3,43) – (4 × 2,43) – (7 × 3,43 × $\frac{3,43}{2}$)✓	44,99 kN.m✓ **(max)**

(2)

Bending moment diagram = 2 marks

(2)

Calculate section modulus and select a suitable I-section parallel flange

4.4 Ze = $\frac{B\ M\ max}{Stress}$ = $\frac{44,99 \times 10^6}{156}$ = 288 397,44 mm³✓

Ze = 288,397 × 10^{-6} m^3

(2)

4.5 Select: 254 × 146 × 31,3 kg/m (Ze = 352,1 × 10^{-6})✓

(1)

Check for shear stress

4.6 Shear stress = $\frac{S\ F\ max}{D \times t}$ = $\frac{27,99 \times 10^3}{251,5 \times 6,1}$ = 18,24 MPa✓✓

Ze = 18,24 < 100 MPa✓

(3)

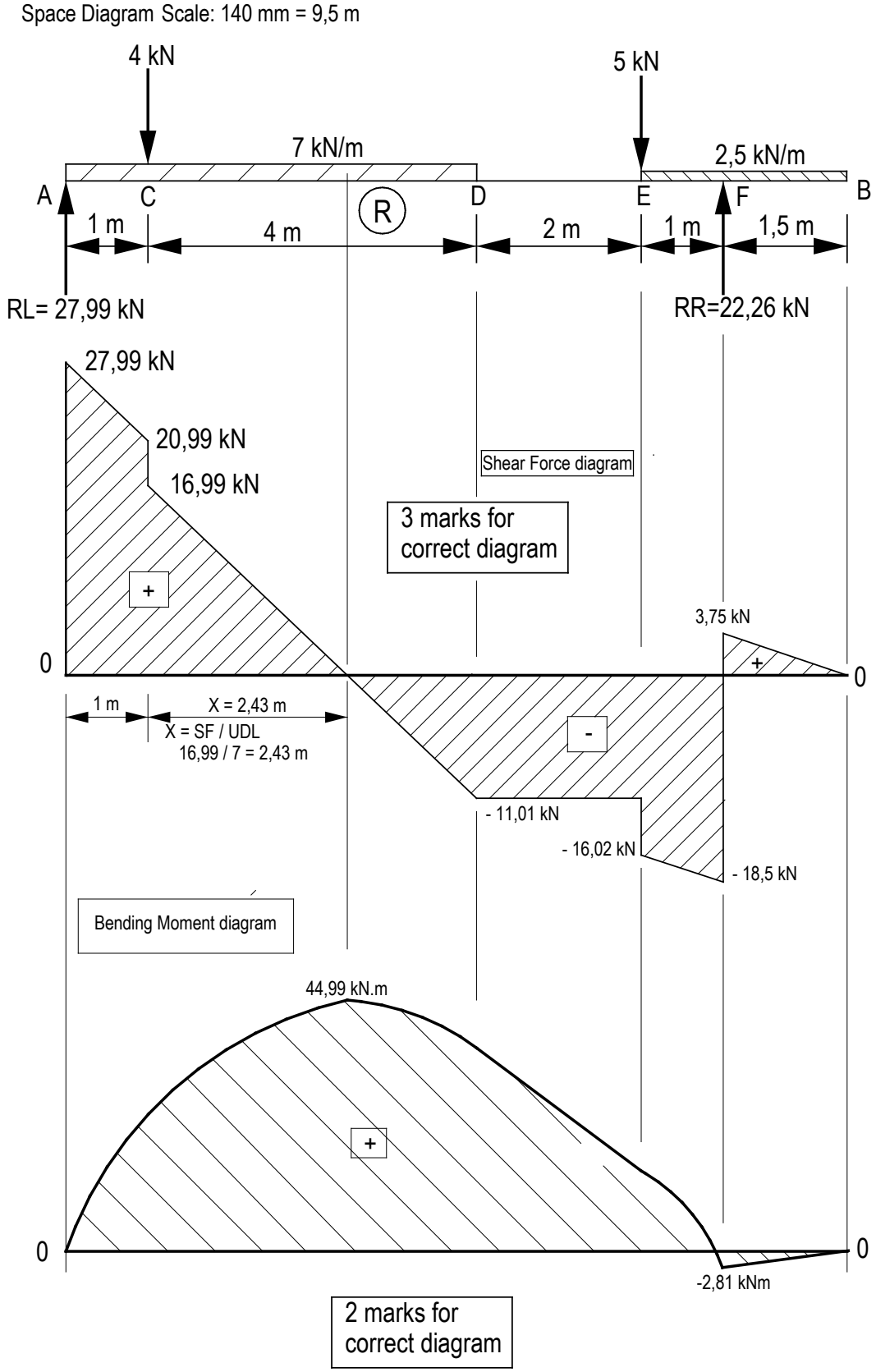
Space Diagram Scale: 140 mm = 9,5 m
4 kN
5 kN
7 kN/m
2,5 kN/m
A
C
R
D
E
F
B
1 m
4 m
2 m
1 m
1,5 m
RL= 27,99 kN
RR=22,26 kN
27,99 kN
20,99 kN
16,99 kN
Shear Force diagram
3 marks for correct diagram
+
3,75 kN
0
0
1 m
X = 2,43 m
X = SF / UDL
16,99 / 7 = 2,43 m
-
- 11,01 kN
- 16,02 kN
- 18,5 kN
Bending Moment diagram
44,99 kN.m
+
0
0
-2,81 kNm
2 marks for correct diagram

[24]

QUESTION 5

5.1

Calculate areas:

Area 1: 10 × 90 = 900

Area 2: 100 × 18 = 1 800

Area 3: 20 × 63 = 1 260

Total area = 3 960✓

Calculate neutral axis from A-B:

3 960 × y_1 = (900 × 45) + (1 800 × 36) + (1 260 × 58,5)✓✓

$$Y_1 = \frac{40\,500 + 64\,800 + 73\,710}{3\,960}$$

$$Y_1 = \frac{179\,010}{3\,960}$$

Y_1 = 45,2 mm✓ (4)

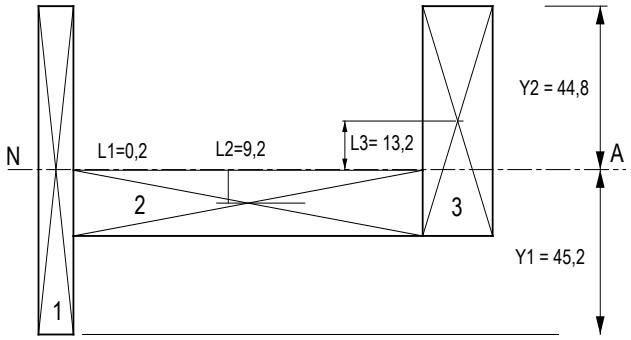

5.2

Calculate second moment of area:

$I_{xx\ Total} = \left(\frac{bd^3}{12} + AL^2\right) + \left(\frac{bd^3}{12} + AL^2\right) + \left(\frac{bd^3}{12} + AL^2\right)$

$I_{xx\ 1} = \left(\frac{10 \times 90^3}{12} + 10 \times 90 \times 0{,}2^2\right)$

$= (607\,500 + 36)$ = 607 536 mm^4✓✓

$I_{xx\ 2} = \left(\frac{100 \times 18^3}{12} + 100 \times 18 \times 9{,}2^2\right)$

$= (48\,600 + 152\,352)$ = 200 952 mm^4✓✓

$I_{xx\ 3} = \left(\frac{20 \times 63^3}{12} + 20 \times 63 \times 13{,}3^2\right)$

$= (416\,745 + 222\,881{,}4)$ = 639 626,4 mm^4 ✓✓

$I_{xx\ Total}$ = 1 448 114,4 mm^4✓ (7)

5.3 **Calculate the profile modulus (Z):**

$Z = \frac{I}{Y}$

$Z = \frac{1\ 448\ 114{,}4\ \text{mm4}}{45{,}2\ \text{mm}}$ ✓✓

$Z = 32\ 037{,}93\ \text{mm}^3$ ✓ $32{,}04 \times 10^{-6}\ \text{m}^3$ (3)

[14]

QUESTION 6

6.1

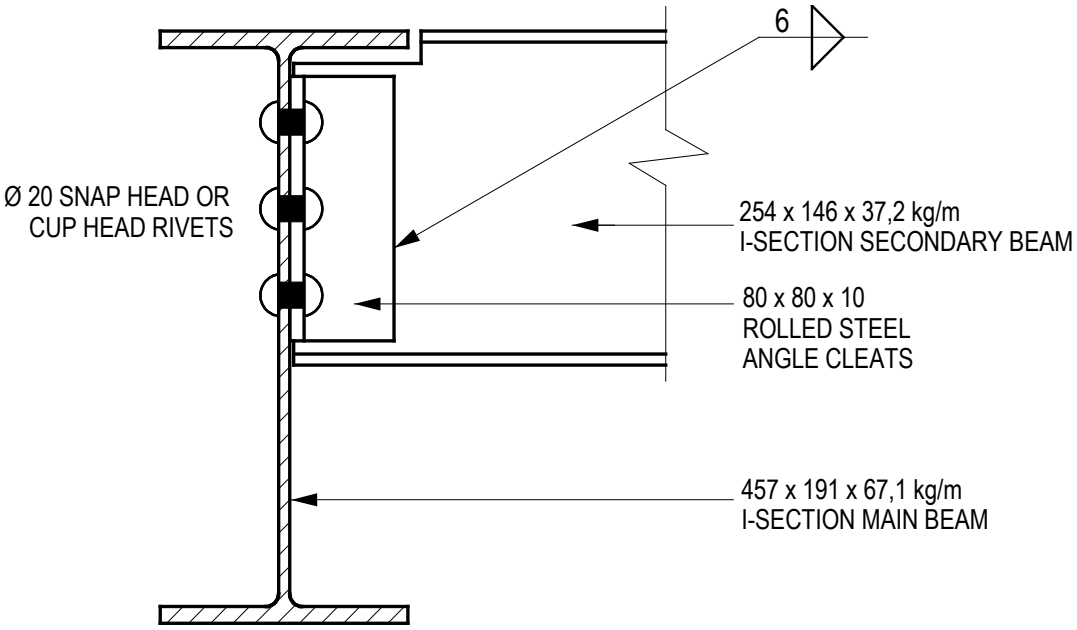

VERTICAL SECTION THROUGH THE MAIN BEAM
SCALE 1:5

6.2

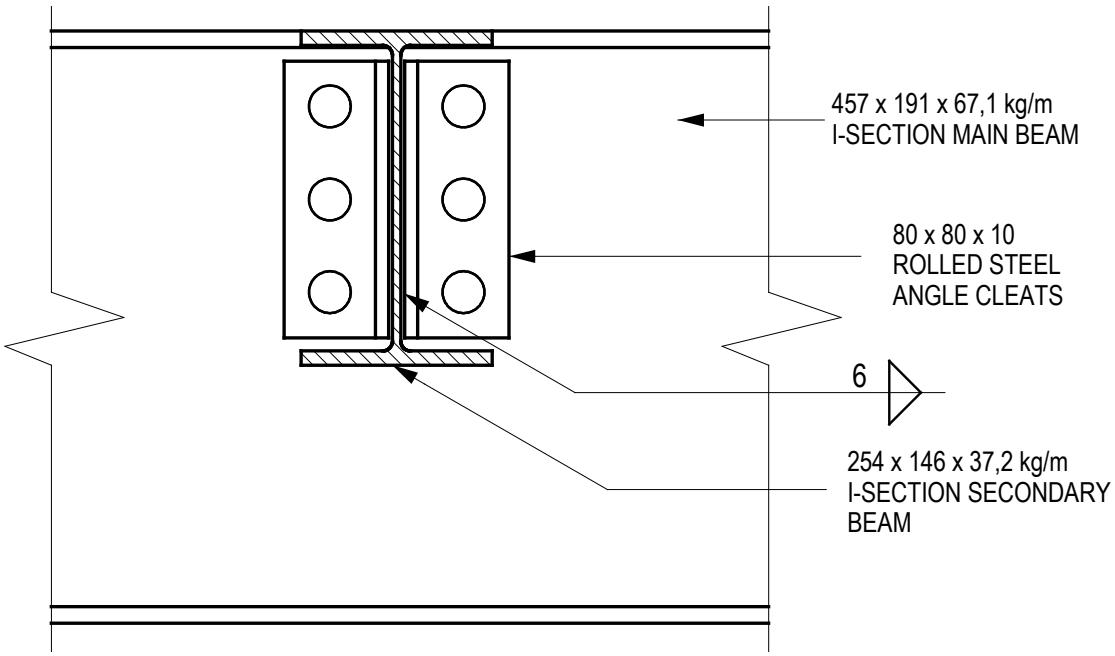

VERTICAL SECTION THROUGH THE SECONDARY BEAM
SCALE 1:5

MARK ALLOCATION Question 6

MARK ALLOCATION (Q6.1)	
Correctness:	
Main beam corr.	2
Secondary beam corr.	2
Steel angle corr	2
Rivets in place	1
	7

MARK ALLOCATION (Q6.2)	
Correctness:	
Main beam corr.	2
Secondary beam corr.	2
Steel angle corr	2
Rivets in place	2
	8

Accuracy	3
Welding symbols	2
Labels	2
Titles	2
	9

Total = 7 + 8 + 9
= 24 marks

[24]

TOTAL: 100

Copyright reserved