higher education & training

Department:
Higher Education and Training
REPUBLIC OF SOUTH AFRICA

T100**(E)**(A1)T
APRIL EXAMINATION

NATIONAL CERTIFICATE

BUILDING AND STRUCTURAL CONSTRUCTION N5

(8060015)

1 April 2016 (X-Paper)
09:00–13:00

REQUIREMENTS: **A2 drawing paper**

Hot-rolled structural steel sections (BOE 8/2)

This question paper consists of 7 pages and 1 formula sheet.

Copyright reserved

DEPARTMENT OF HIGHER EDUCATION AND TRAINING
REPUBLIC OF SOUTH AFRICA

NATIONAL CERTIFICATE
BUILDING AND STRUCTURAL CONSTRUCTION N5
TIME: 4 HOURS
MARKS: 100

INSTRUCTIONS AND INFORMATION

1. Answer ALL the questions.
2. Read ALL the questions carefully.
3. Number the answers according to the numbering system used in this question paper.
4. Use both sides of the drawing paper.
5. Drawings must be done according to the latest building regulations.
6. Drawings must be fully dimensioned, labelled and steel coded.
7. Calculations must be done to the nearest THREE decimals.
8. Labelling must be done horizontally and in printing.
9. Work neatly.

Copyright reserved

QUESTION 1: BOLT CONNECTION

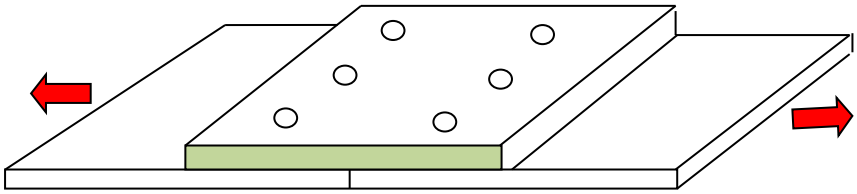

FIGURE 1

FIGURE 2 shows two tie bars connected by means of grade 4.6 bolts, and one connecter plate.

NOTE: Each question has its own specifications.

1.1 Calculate the following:

1.1.1 The bearing stress in the tie bars if the M12 bolts go through 14 mm holes

- Tie bars and connector plate: 122 mm × 6 mm
- Force in the tie bars: 200 kN (4)

1.1.2 The diameter of the bolts if the load is 85 kN and the crushing stress is 350 MPa. (4)

1.1.3 The maximum load that the bolts can safely withstand if the bolt size is 16 mm and the maximum tearing stress is 250 MPa

- Tie bar: 122 mm × 6 mm
- Connecter plates: 6 mm (4)

1.2 Is this connection safe? Give reasons for your answer. (3)
[15]

Copyright reserved

QUESTION 2: FRAME STRUCTURE

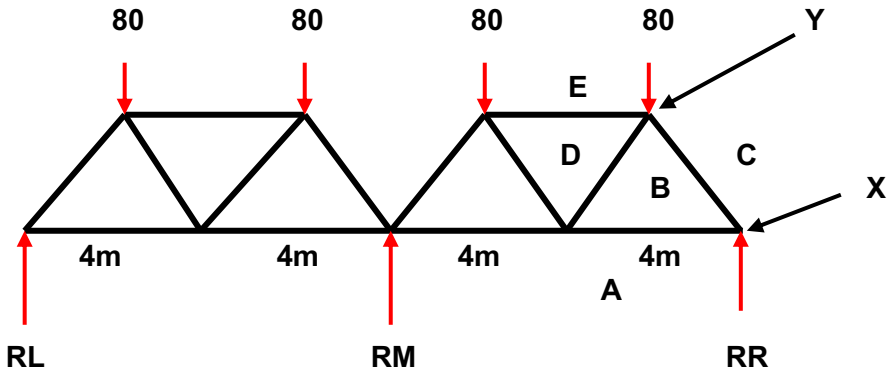

FIGURE 2

FIGURE 2 shows a symmetrical steel bridge structure with four forces acting downwards and three supports acting upwards. The members of the bridge form equilateral triangles having angles of 60° at both ends.

2.1 Determine the magnitude of the THREE reactions RL, RM and RR of the bridge frame as shown. (6)

2.2 Determine the force in the members AB, BC, BD and DE which are connected at nodes X and Y, and distinguish between tension and compression forces in the members.

Copy the schedule below in the ANSWER BOOK and use it for the answers.

MEMBER	MAGNITUDE	STRUT OR TIE
AB		
BC		
BD		
DE		

(4 + 8) (12)

[18]

QUESTION 3: SECTION MODULES

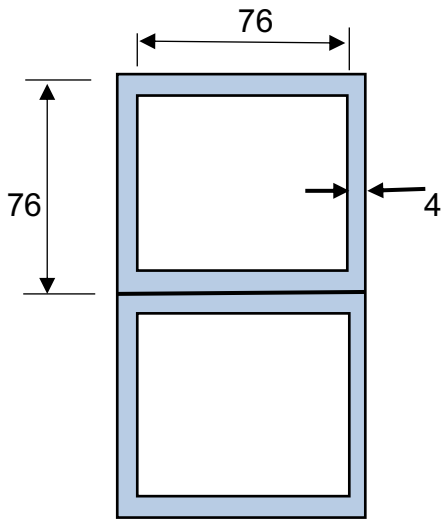

FIGURE 3

FIGURE 3 shows two identical hollow square cross sections through a built-up steel beam. The dimensions are given in mm.

Calculate the following:

3.1 The position of the neutral axes from the bottom (2)

3.2 The moment of inertia about the x-axes (5)

3.3 The section modulus about the x-axes (3)

3.4 The maximum bending moment if the allowable stress is 165 MPa (2)
[12]

Copyright reserved

QUESTION 4

Draw, to scale 1 : 5, a vertical longitudinal section through THREE steps of a steel staircase with wooden treads of 305 mm × 20 mm and a vertical cross section through the stairs and stringer. The risers are open. The drawing must show the steel stringer and all construction details.

Specifications:

Going	:	280 mm
Rise	:	175 mm
Tread	:	305 mm
Stringer	:	160 × 65 × 18,8 kg/m channel iron
Steel plate bracket	:	Waist distance of 50 mm to the top surface of the stringer Balusters are welded to the outside surface of the stringer

Label the drawing and add the welding symbols. **[20]**

QUESTION 5

Draw the following to scale 1 : 1:

A one-and-a-half brick wall supporting an edge beam (L-beam) of 500 mm deep and 330 mm wide with a reinforced concrete slab 200 mm deep, supporting a cavity wall of 270 mm with a plinth of 15 mm on the outside between the outside of the beam and the wall. The outer skin of the cavity wall must be face brick and the inner skin must be plastered. The floor has a 20 mm granolith finish with a 80 mm grano skirting. The beam and the slab are cast monolithically.

Steel used:

Edge beam: 4 Y20 tensile bars
2 R12 compression bars
Stirrups of R8 mm at 200 mm c/c

Floor slab: Main bars Y12 at 200 mm c/c (include the shear reinforced steel)
Secondary bars Y10 at 300 mm centre to centre

Show all construction details clearly. **[15]**

Copyright reserved

QUESTION 6

Make neat, simple pictorial drawings to explain the following concrete structures. Each drawing should fit into a square block of 150 mm × 150 mm.

Proportional freehand drawings will be accepted.

6.1 Step foundation

6.2 Cantilever foundation

6.3 Cantilever beam

6.4 Retaining wall

(4 × 5) **[20]**

TOTAL: 100

Copyright reserved

BUILDING AND STRUCTURAL CONSTRUCTION N5

FORMULA SHEET

Any other applicable formula may also be used.

$BM = \frac{wl}{4}$

$BM = \frac{wl^2}{8}$

n = 5d
n = 5.5d

h = 9d
h = 11d

F = f.a

$F = fs\ \frac{\pi.D^2n}{4}$

F = ft (W - n.d)

$F = f_cD.t.n$

$F = \frac{\pi.(\phi - 0{,}9382\rho)^2 n}{4}$

$I = \left[\frac{BD^3}{12}\right] + [2.area.y^2]$

$\frac{M_r}{I} = \frac{f}{y} = \frac{E}{R}$

M = fZ

$Z = \frac{I_{NA}}{y}$

$M = f\frac{I}{y}$

$M = \frac{fbd^2}{6}$

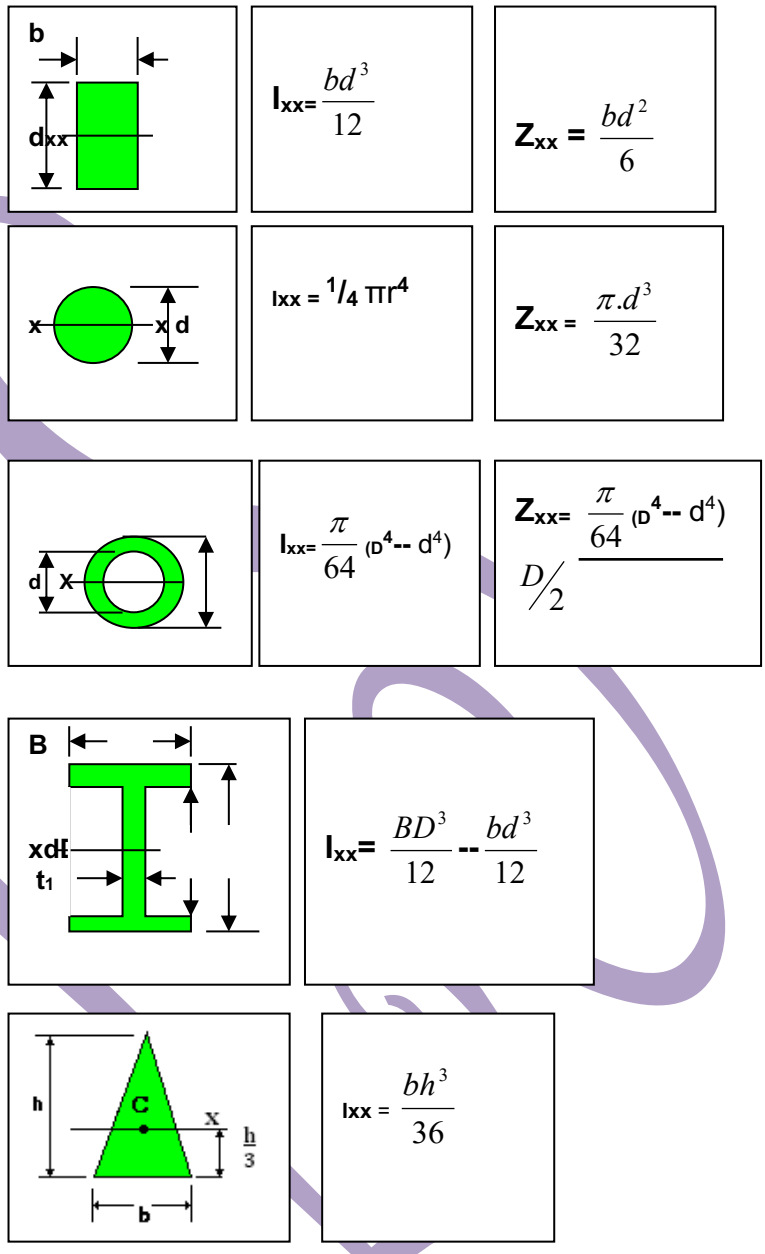

Copyright reserved