higher education & training

Department:
Higher Education and Training
REPUBLIC OF SOUTH AFRICA

T110(E)(A9)T
APRIL EXAMINATION

NATIONAL CERTIFICATE

BUILDING AND STRUCTURAL CONSTRUCTION N5

(8060015)

9 April 2015 (Y-Paper)
13:00–17:00

REQUIREMENTS: **A2 drawing paper**
Standard hot-rolled structural steel sections (BOE 8/2)

This question paper consists of 6 pages, 1 formula sheet and a shape code.

ENGINEERING

Copyright reserved

DEPARTMENT OF HIGHER EDUCATION AND TRAINING
REPUBLIC OF SOUTH AFRICA

NATIONAL CERTIFICATE
BUILDING AND STRUCTURAL CONSTRUCTION N5
TIME: 4 HOURS
MARKS: 100

INSTRUCTIONS AND INFORMATION

1. Answer ALL the questions.
2. Read ALL the questions carefully.
3. Number the answers according to the numbering system used in this question paper.
4. Drawings must be done according to the latest building regulations.
5. Drawings must be fully dimensioned and labelled with steel codes where necessary.
6. Use both sides of the drawing paper.
7. Calculations must be done to the nearest three decimals.
8. Dimensioning must be done horizontally and in print.
9. Write neatly and legibly.

ENGINEERING

Copyright reserved

QUESTION 1: LOADED BEAMS

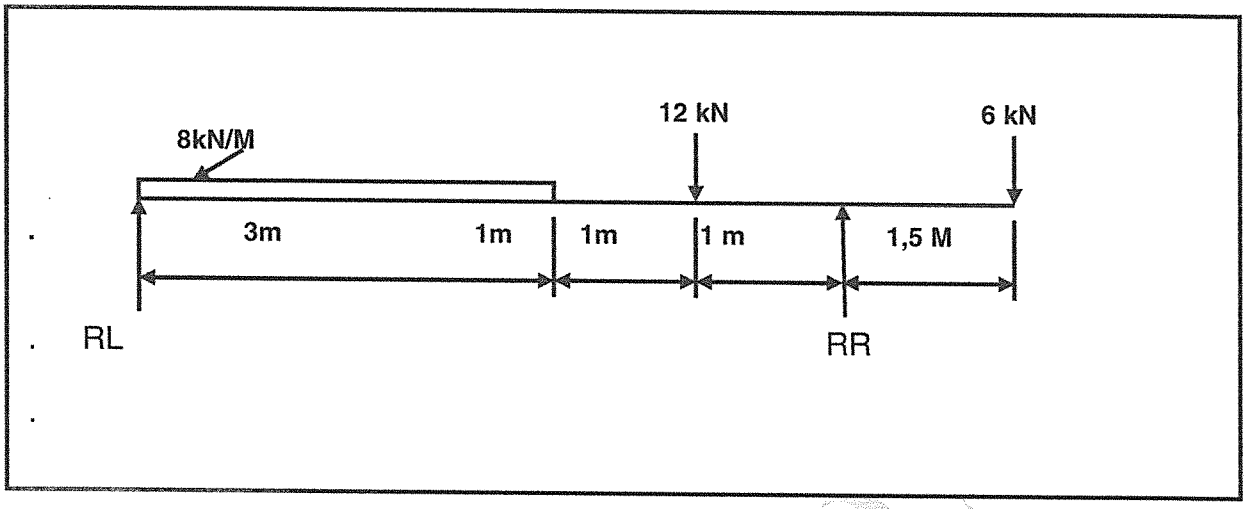

FIGURE 1

FIGURE 1 shows a loaded simply supported beam.

1.1 Calculate the reactions at the supports, left and right. (4)

1.2 Make the necessary calculations and draw to a suitable scale a shear force diagram and a bending moment diagram. (8)

1.3 Determine the maximum shear force and bending moment values. (2)

1.4 Calculate the maximum sectional modules for the loaded beam. (Pv = 165 MPa). (2)

1.5 Select from the steel tables the smallest, suitable I-section with tapered flanges, for the loaded beam. (2)

1.6 Calculate the maximum shear stress in the selected beam. The permissible shear stress is 50 MPa.

NOTE: Ignore the self-weight of the beam. (2)

[20]

ENGINEERI

Copyright reserved

QUESTION 2: SECTION MODULES

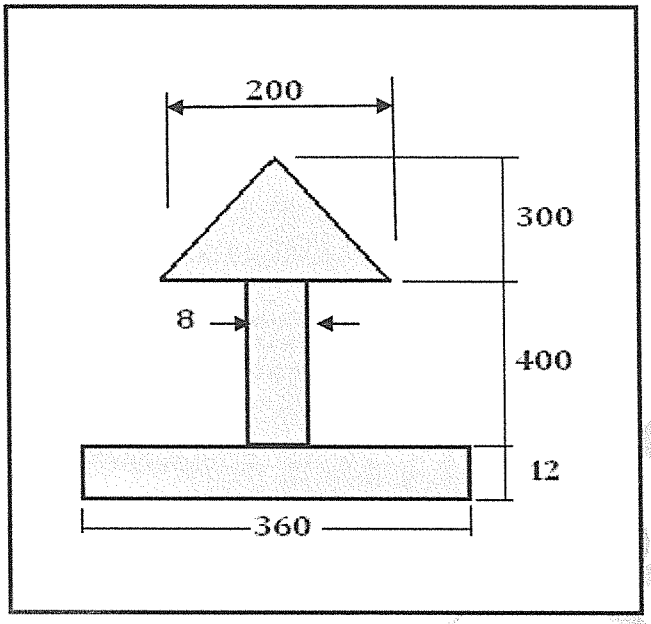

FIGURE 2

FIGURE 2 shows a cross section through a steel section. The dimensions are given in mm.

Calculate the following: (Calculations must be done to the nearest full number)

2.1 The moment of inertia of the profile about the neutral axis N-A. (10)

2.2 The profile modules (Z) about the neutral axis N-A. (2)

2.3 Select a steel beam with I-profile parallel flanges to replace this beam. (1)
[13]

ENGINEERING

Copyright reserved

QUESTION 3: FRAMEWORK

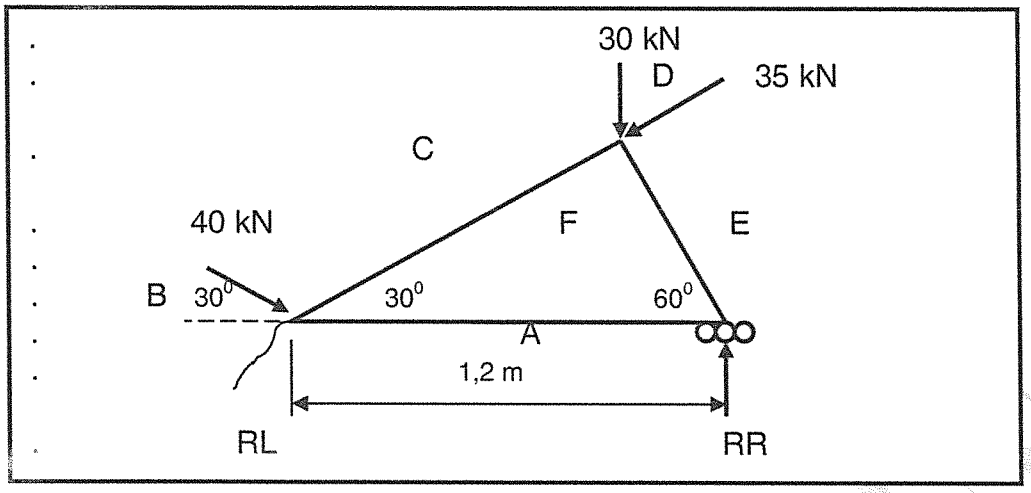

FIGURE 3

FIGURE 3 shows a loaded roof truss. The roof truss is supported on a hinge at RL and by means of rollers at RR.

3.1 Determine the magnitude and directions of the reactions, if the roof is loaded, as shown. (8)

3.2 Determine the size of the forces in each member. Distinguish between tension and compression forces in the members.

Tabulate the results. (6)
[14]

QUESTION 4

Illustrate by means of neat labelled drawings, the following types of reinforced concrete structures:

4.1 Retaining wall

4.2 Ground beam with pad foundations

4.3 Piles with pile cap

4.4 Cantilever slab

(4 x 4) **[16]**

ENGINEERING

Copyright reserved

QUESTION 5

Draw to scale 1 : 5, a vertical cross section through a one-brick wall supporting a reinforced concrete floor slab. The wall is face brick on the outside and plastered on the inside. The slab is built 110 mm into the wall and is 150 mm deep. The underside of the slab is plastered. The floor is finished with clay tiles and timber skirting. The floor slab is reinforced with high-yield steel, 12 mm, main bars, at 200 mm centres and R6 secondary bars at 300 mm centres.

All the construction details must be clearly shown. **[14]**

QUESTION 6

Draw to scale 1 : 5, a front view and a sectional left view of a steel stanchion bolted to a concrete base. The sectional left view must show the holding-down bolts to clearly show the fixing method of the steel stanchion and the concrete base. The front view must clearly show the strengthening flange plate, which is welded to the flanges of the stanchion and the base plate.

	Use the following details:
Base plate	400 x 400 x 25 mm with Ø22 mm holes drilled 25 mm from the edges at the corners.
Stanchion	203 x 203 x 53,5 kg/m
Flange plates	400 x 200 x 8 mm
Holding-down bolts	M20
Concrete base	500 x 500 x 200 mm

Show at least 350 mm of the stanchion above the gusset plates.

Insert the welding symbols. **[15]**

QUESTION 7

Make a neat drawing of a steel bending schedule, with the necessary column headings, for a reinforced concrete slab.

Insert as much as you can of the steel code 3Y16 03-250, in the schedule. **[8]**

TOTAL: 100

Copyright reserved

BUILDING AND STRUCTURAL CONSTRUCTION N5

FORMULA SHEET

Any applicable formula may also be used.

$BM = \frac{wl}{4}$

$BM = \frac{wl^2}{8}$

$n = 5d$
$n = 5.5d$

$h = 9d$
$h = 11d$

$F = f.a$

$F = fs\ \frac{\pi.D^2n}{4}$

$F = ft\ (W - n.d)$

$F = f_cD.t.n$

$F = \frac{\pi.(\phi - 0{,}9382\rho)^2 n}{4}$

$I = \left[\frac{BD^3}{12}\right] + [2.area.y^2]$

$\frac{M_r}{I} = \frac{f}{y} = \frac{E}{R}$

$M = fZ$

$Z = \frac{I_{NA}}{y}$

$M = f\frac{I}{y}$

$M = \frac{fbd^2}{6}$ π .

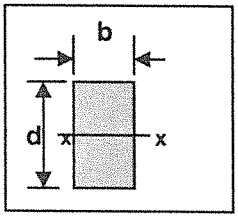

$I_{xx} = \frac{bd^3}{12}$

$Z_{xx} = \frac{bd^2}{6}$

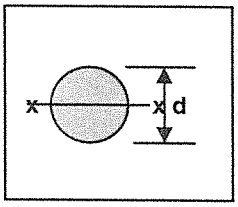

$Ixx = {}^1/_4\ \pi\ r^4$

$Z_{xx} = \frac{\pi.d^3}{32}$

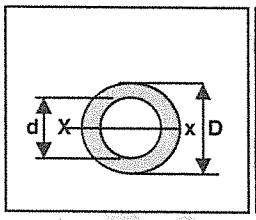

$I_{xx} = \frac{\pi}{64}(D^4 - d^4)$

$Z_{xx} = \frac{\frac{\pi}{64}(D^4 - d^4)}{D/2}$

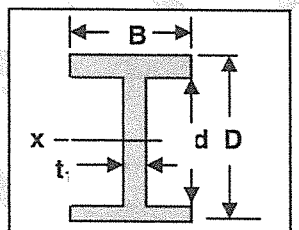

$I_{xx} = \frac{BD^3}{12} - \frac{bd^3}{12}$

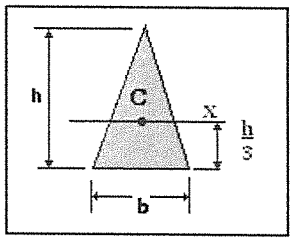

$Ixx = \frac{bh^3}{36}$

$Ze = \frac{bh^2}{12}$

Copyright reserved

SABS 82 SHAPE CODES

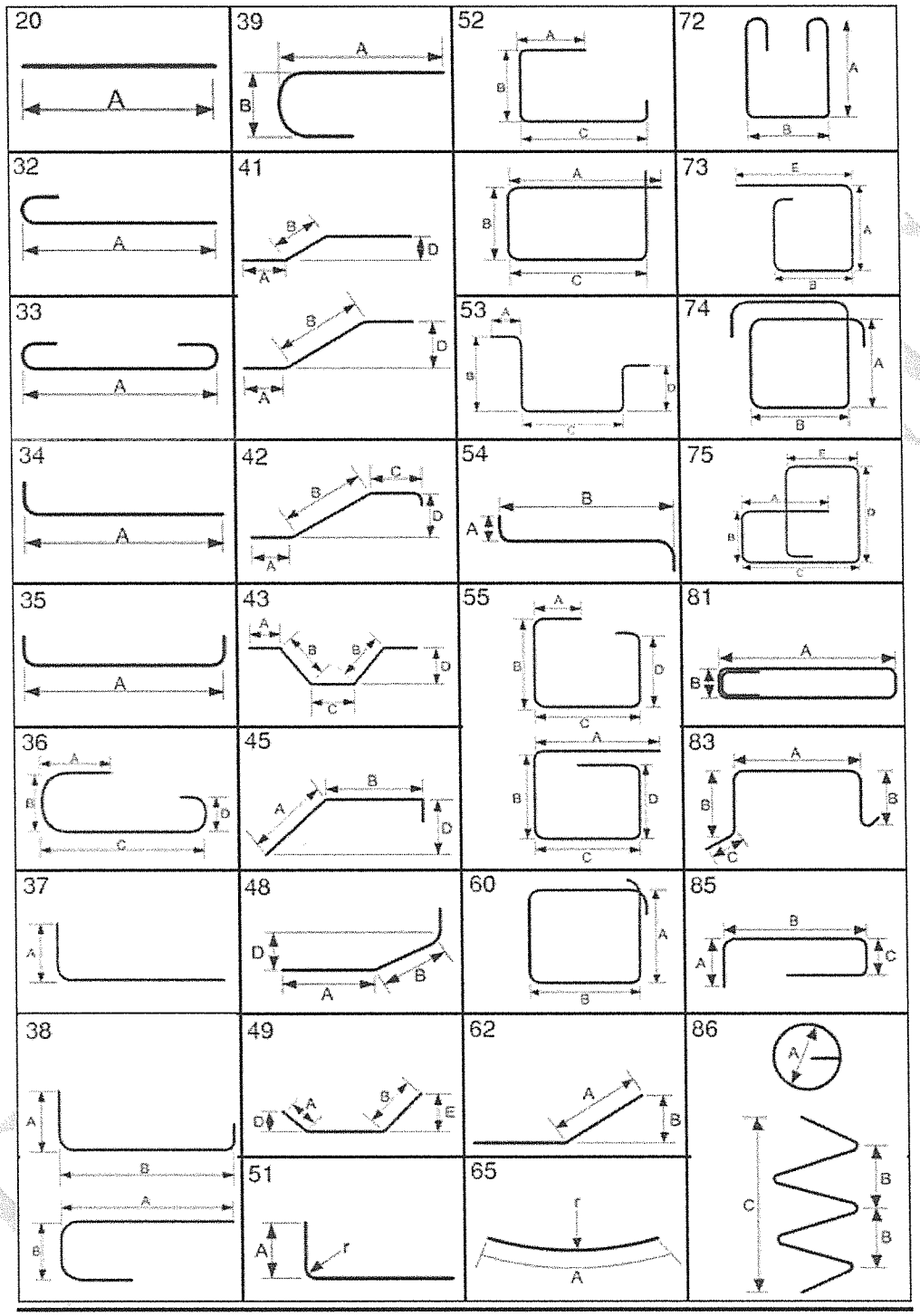

Copyright reserved

higher education & training

Department:
Higher Education and Training
REPUBLIC OF SOUTH AFRICA

MARKING GUIDELINE

NATIONAL CERTIFICATE

APRIL EXAMINATION

BUILDING AND STRUCTURAL CONSTRUCTION N5

9 APRIL 2015

This marking guideline consists of 10 pages.

Copyright reserved

QUESTION 1

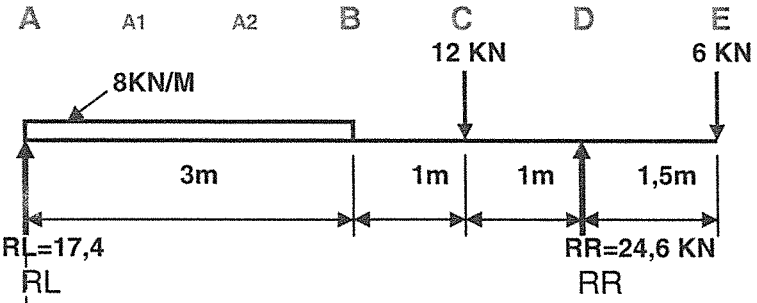

1.1 Take Mo @ L ; Acw = Cw

(Rx5) = (24 x 1,5) + (12 x 4) + (6 x 6,5)

R = 24,6 KN √

Take Mo @ R; Cw = Acw

(L x 5)+(6x1,5) = (12 x 1) + (24 x 3,5)

A = 17,4 KN √ (4)

1.2 Calculation of Shear Force



A; +17,4 = + 17,4 KN √

B; +17,4 –24 = - 6,6 KN √

C; - 6,6-12– = -18,6 KN Max √

D; -18,6 + 24,6 = +6 KN

E; + 6 – 6 = 0 (8)

1.3 2,175 m -6,6

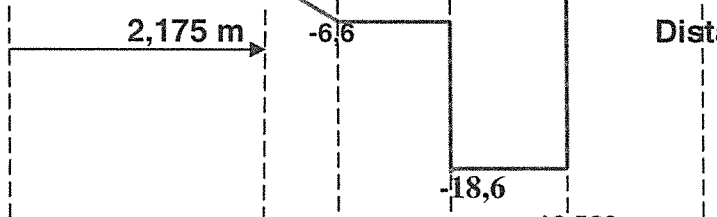

Distance from A where shear is "0" Zero

$\frac{17,4}{8}$ = 2,175 m √√

Shear F Max = 18,6 √ (2)

1.4 Calculation of Bending Moment

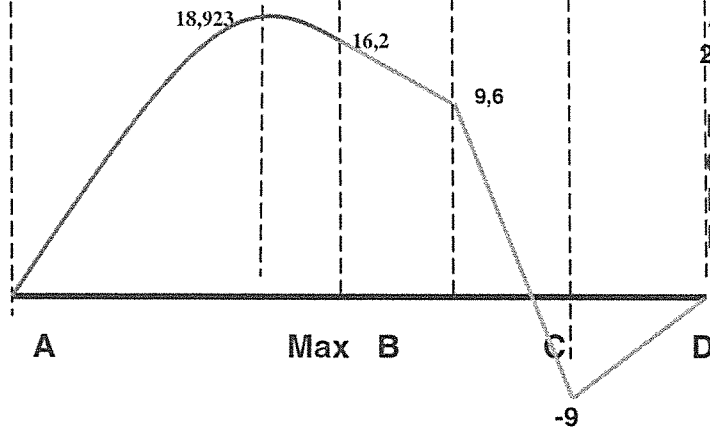

A; + = 0 KN

A_1; +(17,4x1) - (8x0,5) = + 13,4 KNm

A2; +(17,4x2)+(8x2x1) = + 18,8 KNm √

2,175m from A;(17,4x2,175)-(8x2,175x1,0875)

= + 18,923KNm

B; +17,4x3 – 8x3x1,5 = 16,2 KNm √

C; + 17,4x4 – 24x2,5 = 9,6 KNm √

D; + 17,4x5 – 24x3,5 -12x1 = -9 KNm

E; 17,4x6,5 – 24x5 – 12x2,5+ 24,6x1,5 = 0

Bm Max = 18,923 KNm √ (2)

1.5 **Select a Beam (I- Section Taper)**

$$\textbf{Bm Max} = \sigma \times Ze = \frac{18{,}8.x.10^{3}\,Nm}{165x10^{6}.N/mm^{2}} = 0{,}000113939\ m^{3}$$

$$= 113{,}939 \times 10^{-6}\ m^{3} \quad \surd$$

Select a Beam; = **152 x 89 x 17,1 kg/m** $\surd$ **(2)**

1.6 **Investigate to Shearing**

$$\sigma_{shear} = \frac{Shearload}{area(hxt1)} = \frac{18{,}6.x.1000.N}{152{,}4.x.4{,}9mm}$$

= **24,908 MPa** $\surd$ **(N/mm^2 = MPa)** **(2)**

Allowable shear stress for **Gr 43 steel;** 100 > 24,908 **thus OK.** $\surd$

[20]

Copyright reserved

QUESTION 2

	Area	Y-Dist	A x Y	$\frac{bh^3}{12}$	Dist to NA (d)	A x d^2
1	4320	6	25920	51840	423	772973280
2	3104	212	658048	42666666,67	217	146164256
3	30000	512	15360000	150000000	83	206670000
	Σ37424 √		**Σ16043968**√	**Σ192718506,7**√√		**Σ1125807536** √√

(6)

Answer

2.1 $Y = \frac{\Sigma A \times Y}{\Sigma A}$

$Y = \frac{16043968}{37424}$

$Y = 428{,}708$ mm √√ (2)

2.2;

$I_{xx} = \Sigma (INA + Ad^2)$

$= 192718506{,}7 + 1125807536$

$= 1318526043\ mm^4$

$I_{xx} = 1318{,}526 \times 10^{-6}\ mm^4$ √√ (2)

2.2

$Z = {}^{I}/_{Y}$

$Z = \frac{1318{,}526 \times 10^{-6}\ mm^4}{429\ mm}$

$Z = 3073487{,}25\ mm^3$ √√ (2)

$Z = 3{,}073 \times 10^{-6}\ mm^3$ →

2.3

Select a beam I section profile parallel flange

Beam = 203 x 133 x 25,3 Kg/m √

beam is the smallest available (1)

[13]

Copyright reserved

QUESTION 3

3.1

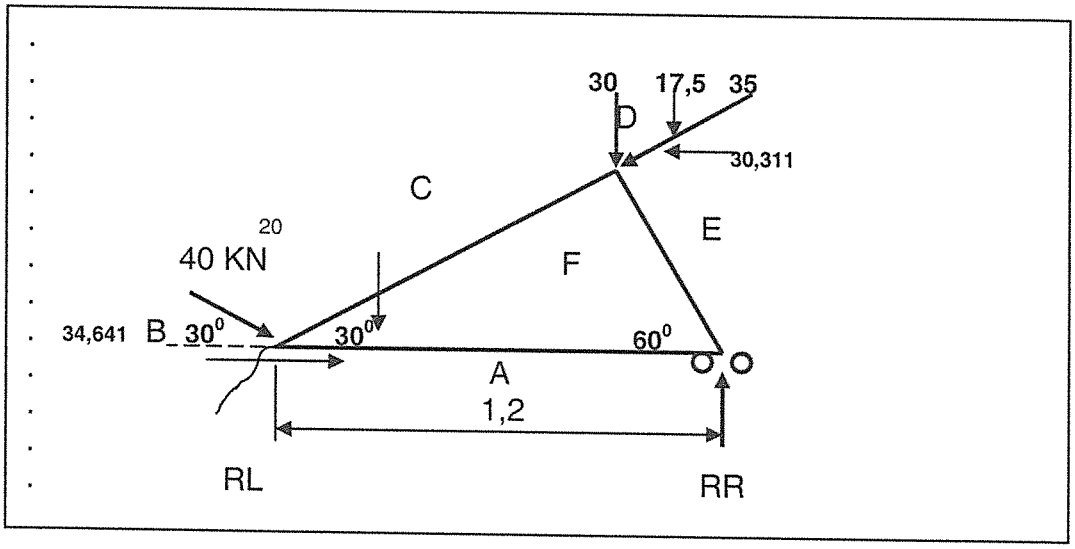

.Take moments at RL; ACM = CW
. (Rx1,2) + (30,311x0,52) = (47,5x0,9) √
. **R_R = 22,49 KN** √
.
.Take moments at RR; Cw = ACW
. (Lx1,2) = (47,5x0,3)+(20x1,2)+(30,311x0,52) √
. **L = 45,01 KN** √ (4)

R_R is on rollers, thus the force is Vert up, = 22,49 KN √

.But R_L is fixed; thus we use Pythagoras to find the **Result** or Equilibrium, F
. $R_L = \sqrt{\sum Vc + \sum Hc}$
. $R_L = \sqrt{(45^2 + 4,33^2)}$ √
. **R_L = 45,218 KN** √
.
.To find the direction use Tan,
. $\text{Tan } Ø = \frac{45,01}{4,33}$
. **$Ø = 85,505^0$** √ to the horizontal (or S from E) √ (4).

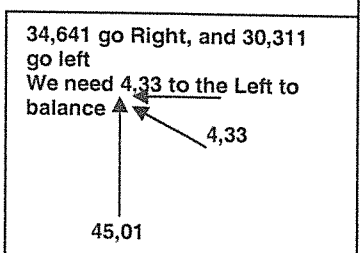

Copyright reserved

3.2

To find the members analytical (work around nodes)

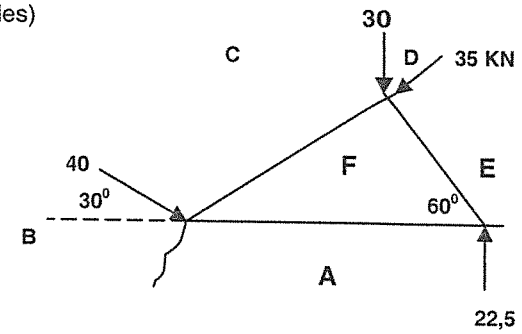

.Find member, DK

. -22,5 = EF x Sin 60^0

. **EF = - 25,9 KN strut** √√

.

.Find member, AF;

. +AF – 25,9 x Cos 60^0 = 0

. +AF = + 25,9 x Cos 60^0

. **AF = +12,984 KN Tie** √√

.Find member, CF (Vert)

. +CF x Sin 30 – 25,9 x Sin 60^0 = – 30 - 35 x Sin 30^0

. **CF = -50,14 KN strut** √√

.

.Find member, CF; (Hor)

. +Cf x Cos 30^0 = -35 x Cos 30^0 – 25,9 x Cos 60^0

. +CF = - 49,953

. **+CF = + 50 KN strut**

(6) [8+6=14]

[14]

Copyright reserved

QUESTION 4

4.1

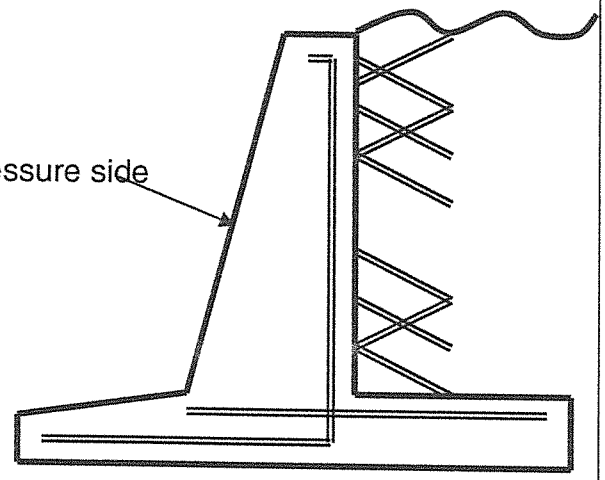

Retaining wall

4.2 **Ground beam with pad foundations.**

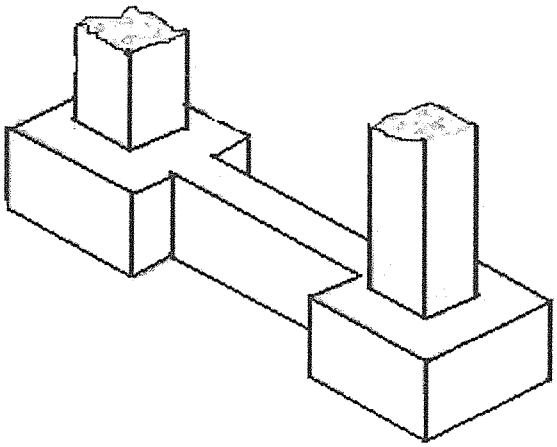

4.3

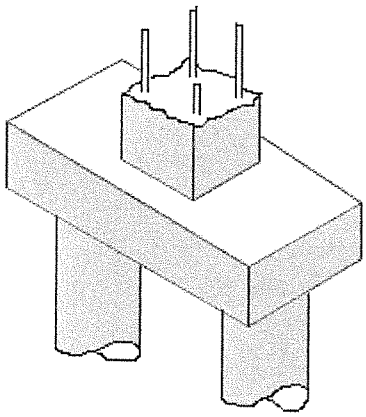

Piles with pile cap.

4.4

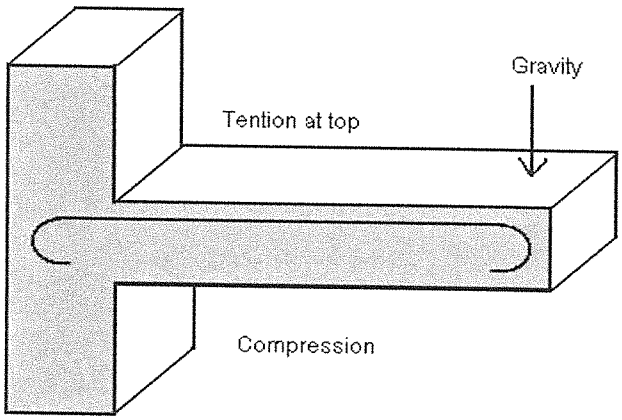

Cantilever Slab

(4 x 4) **[16]**

Copyright reserved

QUESTION 5:

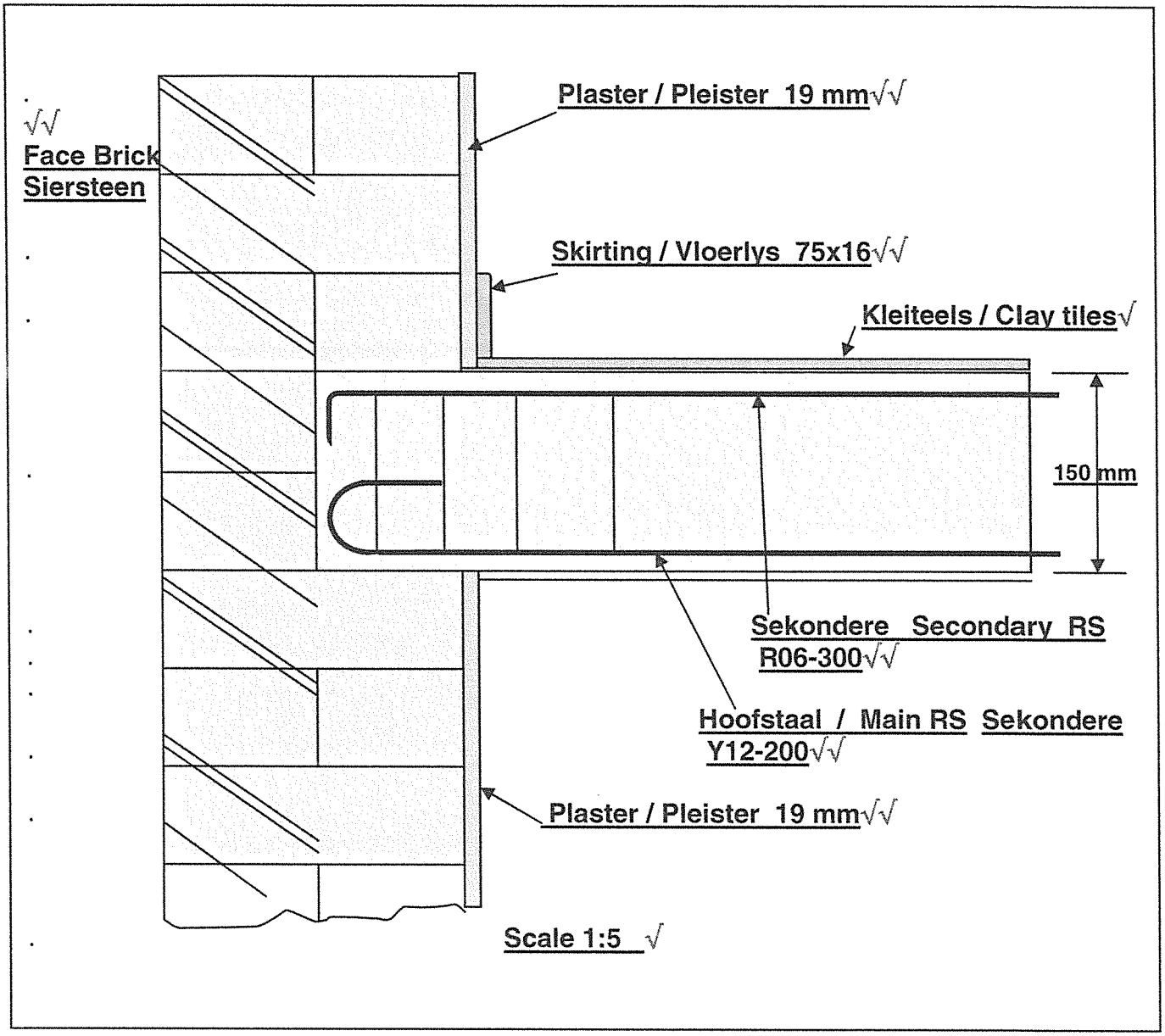

[14]

Copyright reserved

QUESTION 6:

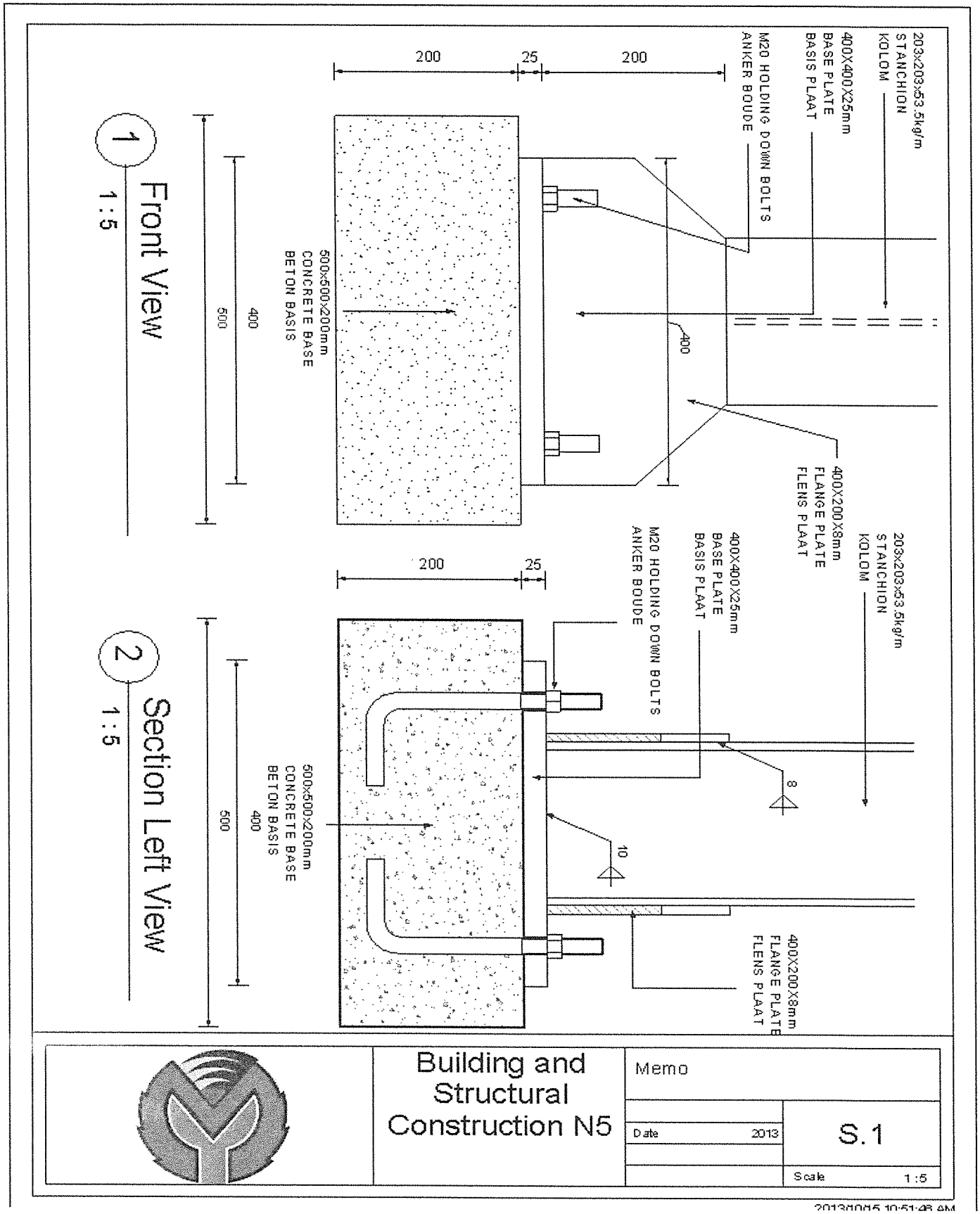

[15]

Copyright reserved

QUESTION 7

1	2	3	4	5	6	7	8
Member	**Bar mark**	**Type and size**	**No of members**	**No in Each**	**Total Number**	**Length of each Bar**	**Shape**
Concrete slab	03	Y16	1	3	3		√√
√	√	√	√	√	√	√	

Or - of

A	B	C	D	E	F	G	H				
Member								**Bending dimensions**			
	Bars per member	**No of member**	**Total bars**	**Type/ diameter**	**Bar mark**	**Shape code**	**Total length**	A	B	C	D
Slab	3	1	3	Y16	03						
√	√	√	√	√	√	√	√	√			

[8]

TOTAL: 100

Copyright reserved