higher education & training

Department:
Higher Education and Training
REPUBLIC OF SOUTH AFRICA

T90(E)(J31)T

AUGUST EXAMINATION

NATIONAL CERTIFICATE

BUILDING AND STRUCTURAL CONSTRUCTION N5

(8060015)

31 July 2014 (Y-Paper)
13:00–17:00

This question paper consists of 7 pages, 1 formula sheet and 1 shape code.

ENGINEERING

Copyright reserved

DEPARTMENT OF HIGHER EDUCATION AND TRAINING
REPUBLIC OF SOUTH AFRICA

NATIONAL CERTIFICATE
BUILDING AND STRUCTURAL CONSTRUCTION N5
TIME: 4 HOURS
MARKS: 100

INSTRUCTIONS AND INFORMATION

1. Answer ALL the questions.
2. Read ALL the questions carefully.
3. Number the answers correctly according to the numbering system used in this question paper.
4. Drawings must be done according to the latest building regulations.
5. Drawings must be fully dimensioned and labelled and steel coded.
6. Calculations must be done to the nearest three decimals.
7. Labelling must be done horizontally and in printing.
8. Use both sides of the drawing paper if needed
9. Write neatly and legibly.

ENGINEERING

Copyright reserved

QUESTION 1: FRAME WORK

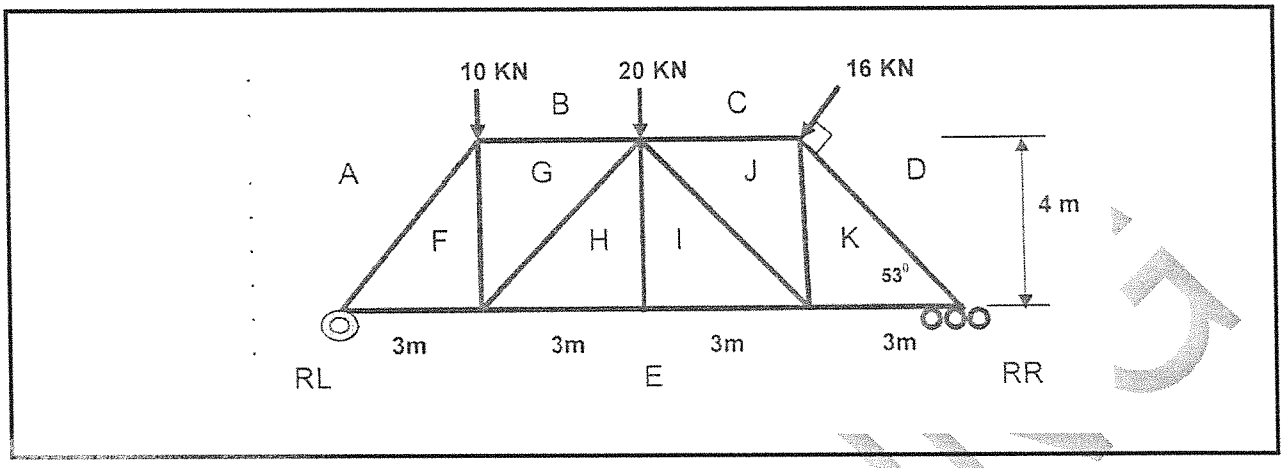

FIGURE 1

Figure 1 shows a loaded frame structure, with three forces. The frame is supported on a hinge at RL and by means of rollers at RR

1.1 Calculate the magnitude and directions of the reactions of the frame as shown. (10)

1.2 Determine only the forces of members, DK, EK, CJ and JK. Also distinguish between tension and compression forces in the members.

Tabulate the results. (8)
[18]

QUESTION 2

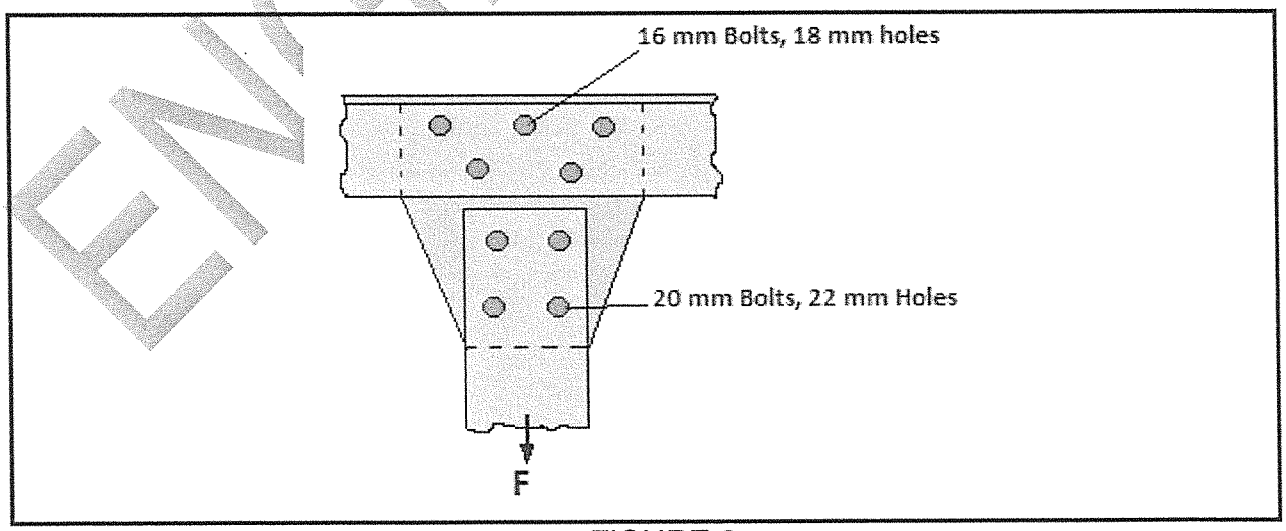

FIGURE 2

FIGURE 2 shows a connection in a steel frame by means of Grade 4,6 bolts.

Calculate the safe load that the following connection can withhold in shearing, if the shear stress is 100 MPa. **[10]**

Copyright reserved

QUESTION 3: CENTROIDS

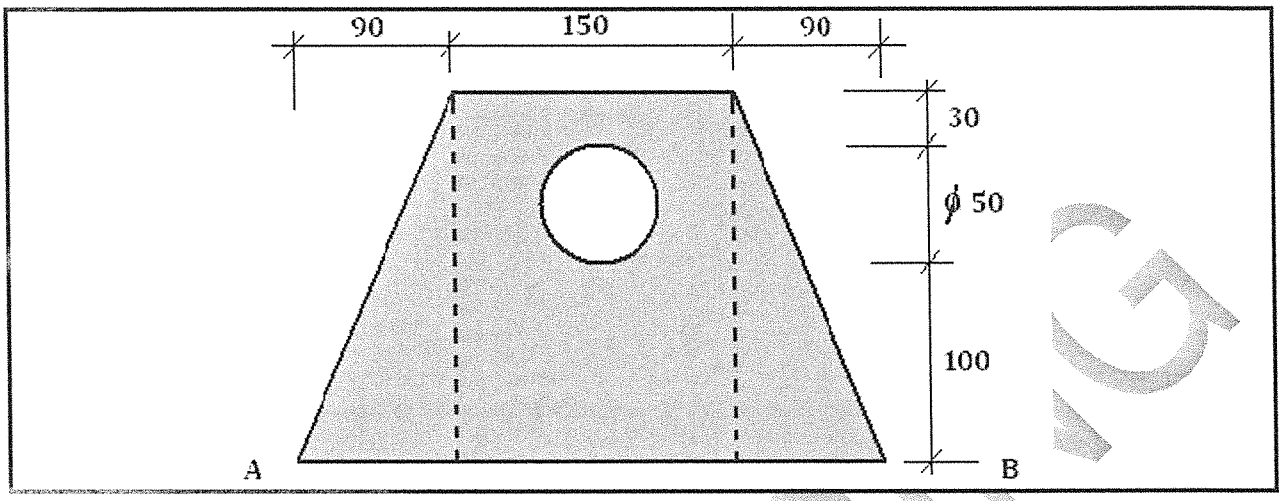

FIGURE 3

FIGURE 3 shows a cross-section through a steel section with a hole, of a steel cast piece. The dimensions are given in mm.

Calculate:

3.1 The position of the neutral axes (NA) from AB (4)

3.2 The moment of inertia of the profile about the neutral axis N-A

NOTE: Take N-A as 77 mm from AB (6)

3.3 The profile modules (z) about the neutral axis N-A (3)

3.4 Calculate the maximum bending moment if the allowable stress is 245 MPa. (3)
[16]

ENGINEERING

QUESTION 4

A concrete beam 300 x 550 mm, support a 200 mm, thick concrete slab, at its left and on its right, three concrete stairs, which go upwards, from the beam.
The first rise of the first step start at the top right corner of the beam.
Draw to scale 1 : 5 a vertical cross section through the beam, slab and the stair steps.

Use the following specifications:

Stairs	Rise	180 mm
	Tread	280 mm
	Waist	120 mm
	Slab	1 m long and 200 mm thick
Steel		The main reinforcement in the stairs and the slab, are 06Y16 01
		Secondary reinforcement in the stairs and the slab, are 25Y12 02
		Compression reinforcement in the stairs and the slab, are 06R10 03
Beam		The tension reinforcement in the beam are 04Y20 04
		The compression reinforcement in the beam are 03R16 05
		The stirrup in the beam are 08R08 06
		The stairs and the slab are off-finished with ceramic tiles.
Off-finish		The treads and the slab are off-finished with ceramic tiles.

Note: The drawing MUST be fully labelled **[18]**

ENGINEERING

Copyright reserved

QUESTION 5: REINFORCING DOCUMENTATION

5.1 Copy the schedule below FIGURE 4, in the ANSWER BOOK.

Then use the information below to complete the schedule as a bending schedule.

A	B	C	D	E	F	G	H				
Member								Bending dimensions			
	Bars per member	No of member	Total bars	Type/ diameter	Bar mark	Shape code	Total length	A	B	C	D
Beam											
Beam											

FIGURE 4

5.2 Use the information below to complete the bending schedule, above, for the steel reinforcement in the beams in a construction project.

5.2.1 The bars must be cut according to the shape code 32 (2)

5.2.2 You need bars for six beams. Each beam must have 4 high-yield steel 16 mm bars and 6 plain mild steel 8 mm bars. (8)

5.2.3 Each of the 16 mm bars must have a straight length of 600 mm. The unbent length of these bars must be 900 mm. (2)

5.2.4 Each of the mild steel bars must have a straight length of 800 mm. The unbent lengths of these bars must be 1 200 mm. (2)

5.2.5 The high-yield bars have a bar mark of 25. The bar mark for the mild steel bars is 26. (2)

5.2.6 Calculate the total bars for each type. (2)
[18]

QUESTION 6

6.1 Make a simple isometric drawing not to scale of a two pile foundation, supporting a pile cap with one square column. (4)

6.2 Name and explain THREE places where this kind of foundations will be used. (6)
[10]

ENGINEERING

QUESTION 7

A hexagon concrete column with 400 mm sides and with eight Y20 longitudinal bars and R6 helical binders at 150 mm centre has to be constructed.

Draw to a scale 1 : 10, a vertical longitudinal section and a horizontal cross-section through the column to show the constructional details.

Show at least 500 mm of the length of the column and label the drawings **[10]**

TOTAL: 100

ENGINEERING

Copyright reserved

BUILDING AND STRUCTURAL CONSTRUCTION N5

FORMULA SHEET

Any applicable formula may also be used.

BM = $\frac{wl}{4}$

BM = $\frac{wl^2}{8}$

n = 5d
n = 5.5d

h = 9d
h = 11d

F = f.a

F = fs $\frac{\pi.D^2n}{4}$

F = ft (W - n.d)

F = f_cD.t.n

F = $\frac{\pi.(\phi - 0{,}9382\rho)^2 n}{4}$

I = $\left[\frac{BD^3}{12}\right] + [2.area.y^2]$

$\frac{M_r}{I} = \frac{f}{y} = \frac{E}{R}$

M = fZ

Z = $\frac{I_{NA}}{y}$

M = f$\frac{I}{y}$

M = $\frac{fbd^2}{6}$

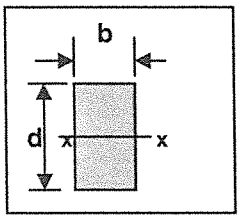

$I_{xx} = \frac{bd^3}{12}$

$Z_{xx} = \frac{bd^2}{6}$

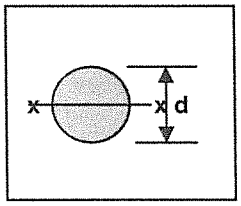

$I_{xx} = {}^1/_4 \pi r^4$

$Z_{xx} = \frac{\pi.d^3}{32}$

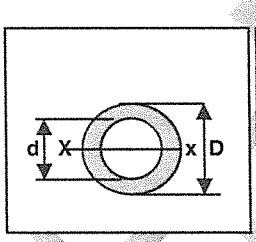

$I_{xx} = \frac{\pi}{64}(D^4 - d^4)$

$Z_{xx} = \frac{\frac{\pi}{64}(D^4 - d^4)}{D/2}$

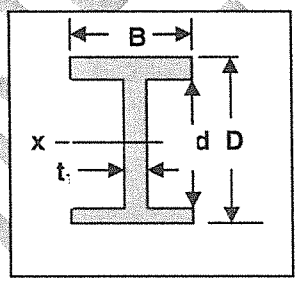

$I_{xx} = \frac{BD^3}{12} - \frac{bd^3}{12}$

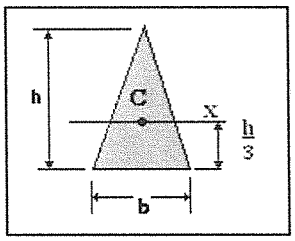

$I_{xx} = \frac{bh^3}{36}$

ENGINEERING

Copyright reserved

QUESTION 6

6.1

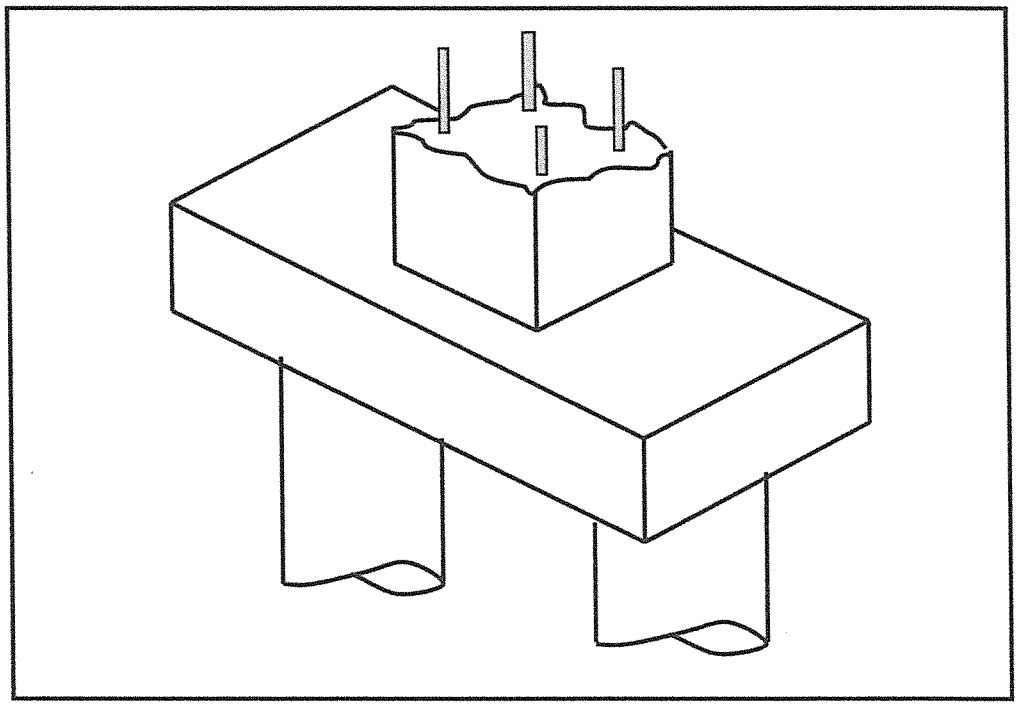

(4)

6.2
- at an old dump where = unstable soil (previously disturbed soil)√√
- natural deep soft soil = natural unstable√√
- inside a river to support a bridge column√√
- Where it is difficult to construct a normal foundation,,

(Any other valid reason will be excepted) (Any 3 x 2) (6)
[10]

QUESTION 7

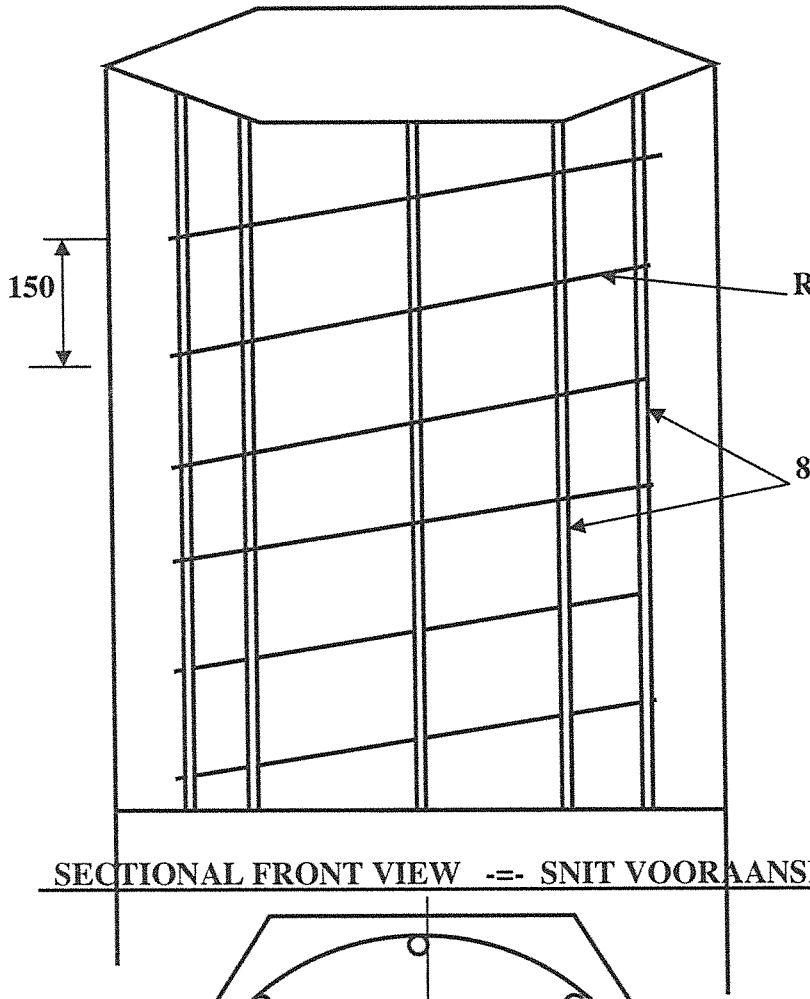

√√

R6-150 Spiraal Binders

Helical Reinforce

√√

8Y20 Hoofbewapening

Main Reinforcing

SECTIONAL FRONT VIEW -=- SNIT VOORAANSIG √√

√√

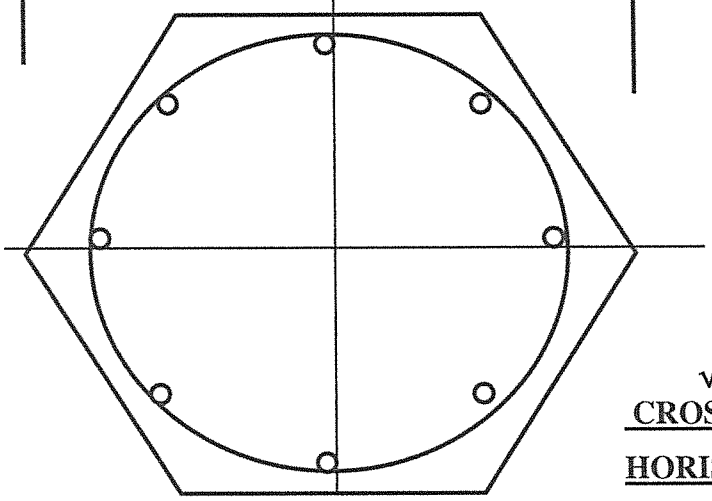

√√

CROSS-SECTIONAL VIEW

HORISONTALE SNIT

5+5=10

[10]

TOTAL: 100

Copyright reserved