higher education & training

Department:
Higher Education and Training
REPUBLIC OF SOUTH AFRICA

T90(**E**)(A3)T
APRIL EXAMINATION

NATIONAL CERTIFICATE

BUILDING AND STRUCTURAL CONSTRUCTION N5

(8060015)

3 April 2014 (Y-Paper)
13:00–17:00

Reguirements: One sheet of drawing paper

This question paper consists of 7 pages, 1 formula sheet and 1 shape code.

ENGINEERING

Copyright reserved

DEPARTMENT OF HIGHER EDUCATION AND TRAINING
REPUBLIC OF SOUTH AFRICA

NATIONAL CERTIFICATE
BUILDING AND STRUCTURAL CONSTRUCTION N5
TIME: 4 HOURS
MARKS: 100

INSTRUCTIONS AND INFORMATION

1. Answer ALL the questions.
2. Read ALL the questions carefully.
3. Number the answers according to the numbering system used in this question paper.
4. Drawings must be done according to the latest building regulations.
5. Drawings must be fully dimensioned and labelled with steel codes where necessary.
6. Calculations must be done to the nearest three decimals.
7. Labelling must be done horizontally and in printing.
8. Use both sides of the drawing paper.
9. Write neatly and legibly.

ENGINEERING

Copyright reserved

QUESTION 1

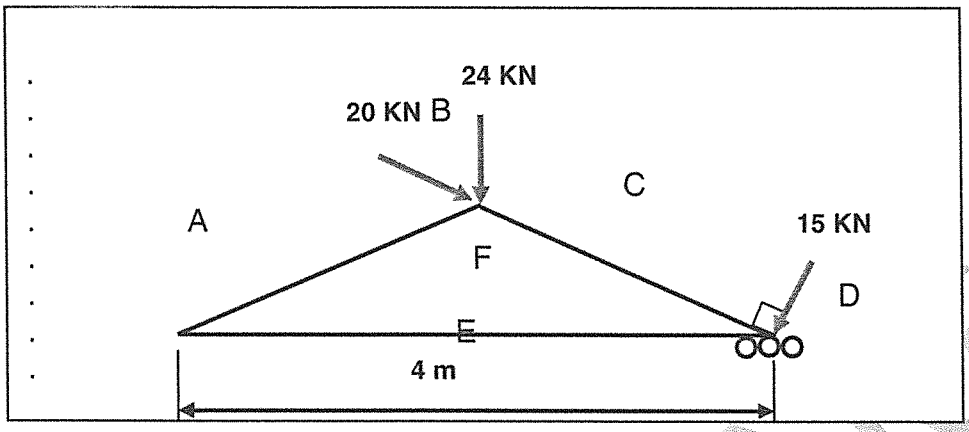

FIGURE 1

FIGURE 1 shows a loaded roof truss, with three forces and a pitch of 30° at both sides. The roof truss is supported by a hinge at RL and by means of rollers at RR.

1.1 Calculate the magnitude and directions of the reactions, of the roof truss as shown. (8)

1.2 Determine the force in each member, and distinguish between tension and compression forces in the members.

Tabulate the results. No marks will be allocated for a graphical solution. (6)
[14]

QUESTION 2

2.1 Show by means of neat sketches four ways in which a bolt connection can fail. (8)

2.2

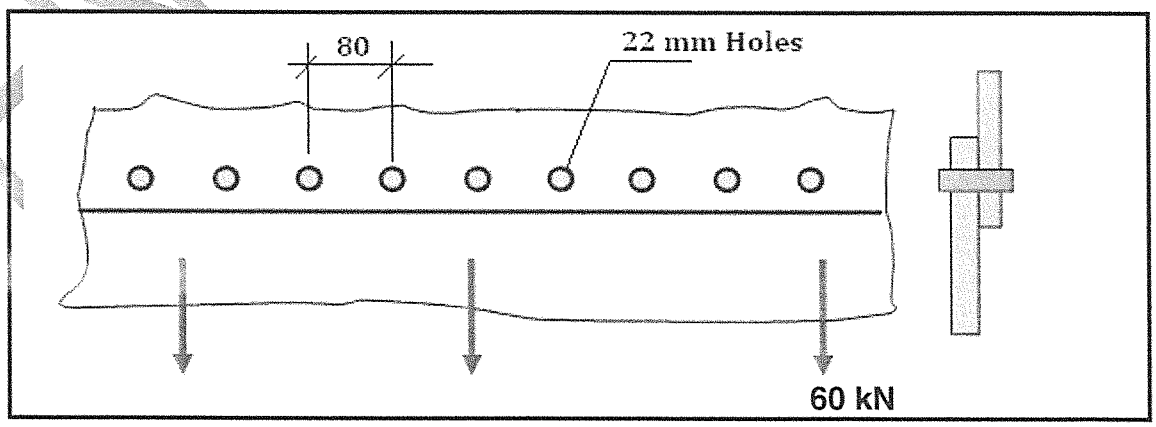

FIGURE 2

ENGINEERING

FIGURE 2 shows two plates of a steel tank connected by means of steel rivets.

Two 16-mm thick steel plates are connected by means of a single riveted lap joint. The pitch of the rivets is 80 mm and the rivet diameter is 20 mm. The load carried by the plates is 60 kN per pitch of the width. The rivet hole diameter is 22 mm.

Calculate the maximum allowable stress in the joint. (12)
[20]

QUESTION 3

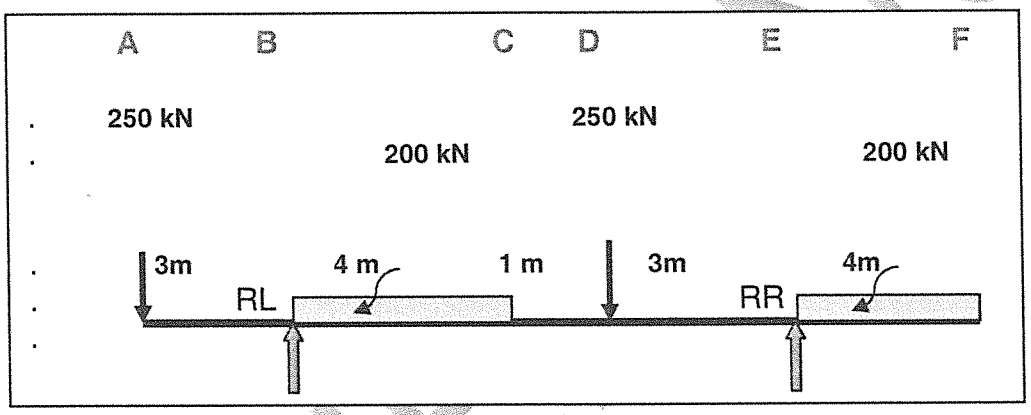

FIGURE 3

Figure 3 shows a loaded simply supported beam.

3.1 Calculate the reactions at RL and RR. (2)

3.2 Make the necessary calculations to determine the maximum shear force and bending-moment values of the loaded beam. (Do not draw the diagrams) (6 + 6) (12)

3.3 Also do the necessary calculations and select a beam from the structural steel tables, the smallest suitable H-section with parallel flanges. (3 + 1) (4)

3.4 Investigate with regard to bending and shearing. The maximum bending stress for this steel beam, is 465 MPa and shear stress is 100 MPa.

Note: Ignore the self-weight of the beam (4)
[22]

ENGINEERING

Copyright reserved

QUESTION 4

A hollow, square steel stanchion with a base plate is bolted to a concrete base in the centre. The welded connections between the stanchion and the base plate are strengthened by means of two gusset plates which are welded to the stanchion and the base plate.

Draw to scale 1 : 5 an isometric view of the stanchion, base plate and pad foundation, with the necessary details.

Use the following details:

Base plate	400 x 400 x 25 mm with Ø22 mm holes drilled 50 mm from the edges at the corners. With M20 hold down bolts.
Stanchion	200 x 200 x 10 mm
Gusset plates	400 x 200 x 6 mm
Welding Specifications	Gusset plates are 6 mm fillet welded to the base plate. The stanchion is 8 mm filled welded all around to the base plate. The stanchion and gusset plates are 10 mm fillet welded both on sides.
Concrete base	500 x 500 mm, height is unknown.

Show at least 350 mm of the stanchion.

NB - The labelling and welding symbols must be shown. **[20]**

ENGINEERING

Copyright reserved

QUESTION 5

Use a isometric drawing to any scale, to explain the method of construction to fix a timber floor with tongued and grooved joined flooring boards to a reinforced concrete floor. The drawing must also include the skirting, timber fillets at 450 c/c, and part of the plastered wall. **[10]**

QUESTION 6

FIGURE 4 below shows a cross-section profile through a concrete structure which include; a stair case, slab, pad-foundation with concrete column and an edge-beam.

Copy this figure, (not to scale), on the drawing page and insert/add the steel reinforcement. Use the schedule below, to label and steel code the different reinforcements.

All tension reinforcements are high-yield steel (**Y**)
All compression steel are soft-mild steel (**R**)

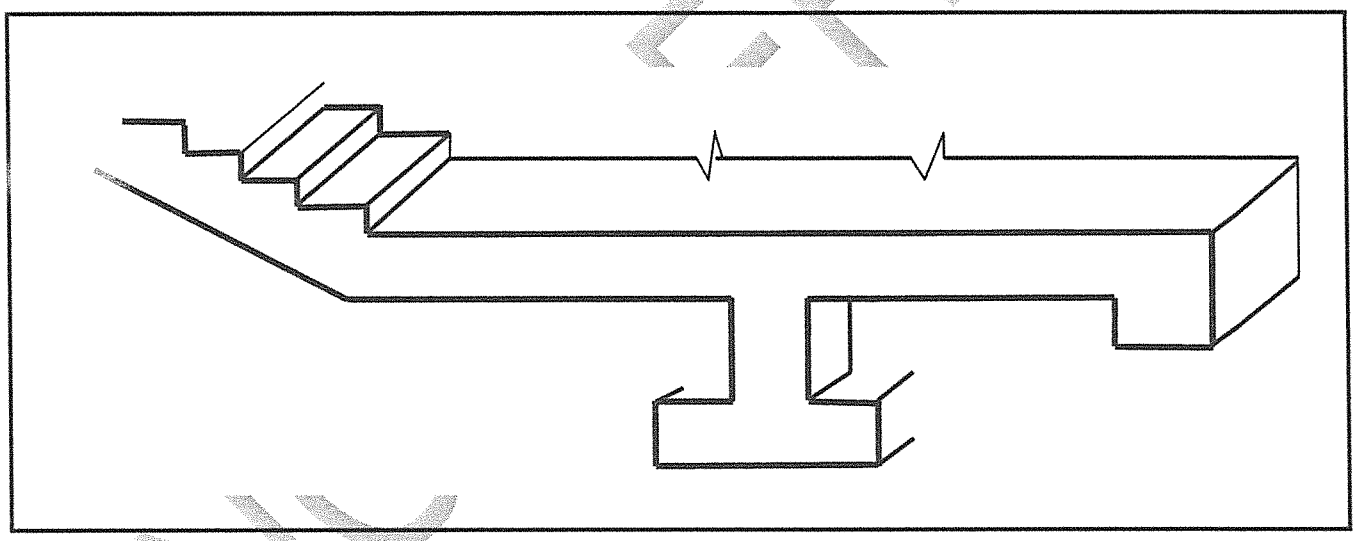

FIGURE 4

ENGINEERING

1	2	3	4	5	5	6	7
Member	Bar mark	Type and size	No of members	No in Each	Total Number	Length of each Bar	Shape
Pad foundation	1	Y30	1	6	6		
Column	2	Y25	1	4	4		
Beam	3	Y20	1	3	3		
Slab	4	Y10	1	8	8		
Beam	5	R16	1	2	2		
Slab	6	R16	1	8	8		
Stair case	7	Y16	1	5	5		

[14]

TOTAL: 100

ENGINEERING

Copyright reserved

BUILDING AND STRUCTURAL CONSTRUCTION N5

FORMULA SHEET

Any applicable formula may also be used.

$BM = \frac{wl}{4}$

$BM = \frac{wl^2}{8}$

n = 5d
n = 5.5d

h = 9d
h = 11d

F = f.a

$F = fs \frac{\pi.D^2 n}{4}$

F = ft (W - n.d)

$F = f_c D.t.n$

$F = \frac{\pi.(\phi - 0{,}9382\rho)^2 n}{4}$

$I = \left[\frac{BD^3}{12}\right] + [2.area.y^2]$

$\frac{M}{I} = \frac{f}{y} = \frac{E}{R}$

M = fZ

$Z = \frac{I_{NA}}{y}$

$M = f\frac{I}{y}$

$M = \frac{fbd^2}{6}$ π .

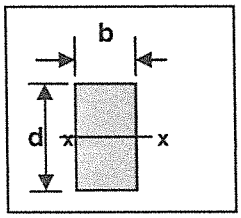

$I_{xx} = \frac{bd^3}{12}$

$Z_{xx} = \frac{bd^2}{6}$

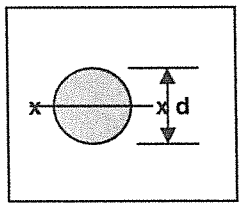

$I_{xx} = {}^1/_4 \pi r^4$

$Z_{xx} = \frac{\pi.d^3}{32}$

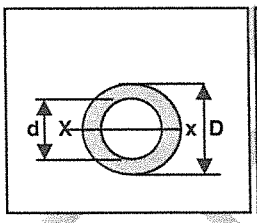

$I_{xx} = \frac{\pi}{64}(D^4 - d^4)$

$Z_{xx} = \frac{\frac{\pi}{64}(D^4 - d^4)}{D/2}$

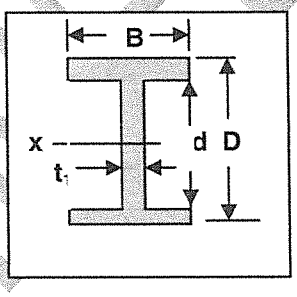

$I_{xx} = \frac{BD^3}{12} - \frac{bd^3}{12}$

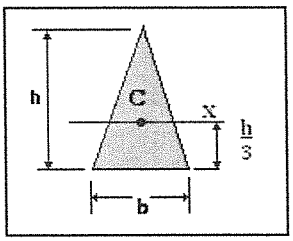

$I_{xx} = \frac{bh^3}{36}$

ENGINEERING

Copyright reserved

SABS 82 SHAPE CODES

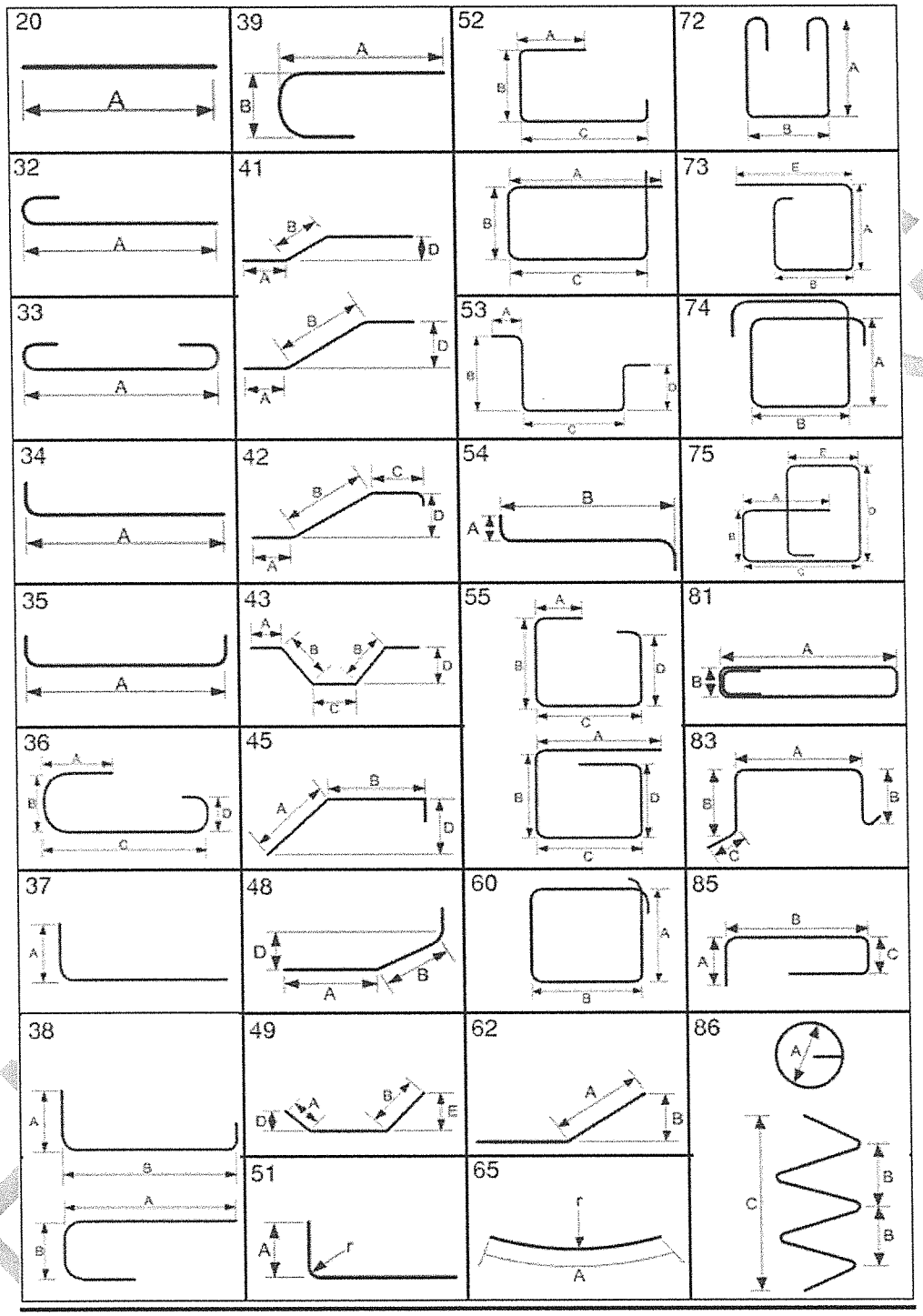

Copyright reserved

higher education & training

Department:
Higher Education and Training
REPUBLIC OF SOUTH AFRICA

MARKING GUIDELINE

NATIONAL CERTIFICATE

APRIL EXAMINATION

BUILDING AND STRUCTURAL CONSTRUCTION N5

3 APRIL 2014

This marking guideline consists of 7 pages.

Copyright reserved

QUESTION 1

1.1

HC: 20 x Cos 30° = +17,32 kN

15 x Cos 60° = -7,5 kN

$\sum$ HC = +9,82 kN

VC: 20 x Sin 30° = 10 kN

15 x Sin 60° = 12,99 kN

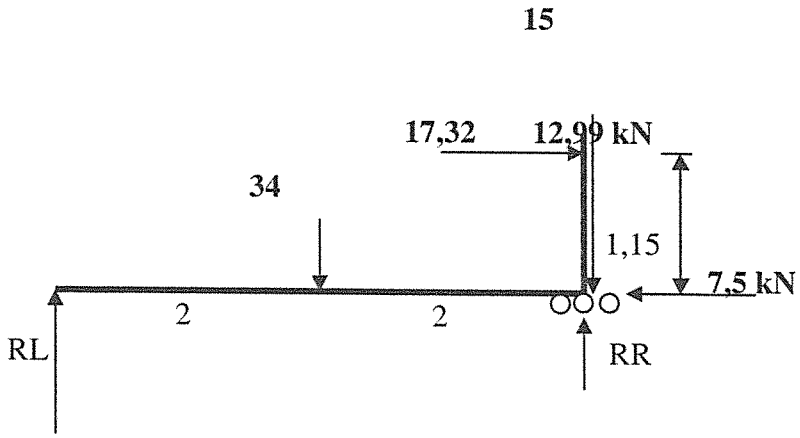

Take Mo about RR CW = ACW

(Lx4)+(17,32x1,15) = 34x2

RL = 12,021 kN√

Take Mo about RL ACW = CW

(RRx4) = (34x2)+(12,99x4)+(17,32x1,15)+(7,5x0)

RR = 34,97 kN → **On rollers thus vert up√√**

Test: Upwards = Downwards

47 = **47**

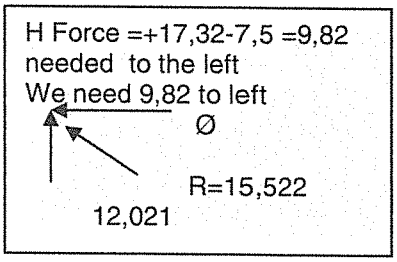

To Find RL = Result = $\sqrt{\sum Vc^2 + Hc^2}$ = $\sqrt{12,021^2 + 9,82^2}$√

RL = **15,522 kN√**

Direction: Tan Ø = $^{12,021}/_{9,82}$

Ø = **Tan^{-1}** ($^{12,021}/_{9,82}$) √

Ø = **50,754°** **with the horizontal line√√**

(8)

1.2 **To cal, AF:**

- 15,522 x Sin 50,754 = +AF x Sin 30°

AF = - 24,042 strut√√

To cal CF;

- 34,97 = -15 x Sin 60 + CF x Sin 30

$\frac{-34,97 + 15 \times \sin 60}{\sin 30}$ = CF

CF = - 43,959 kN strut√√

Horizontal to cal; **EF**

Left = right

+ EF – 43,959 x Cos 30^0 = 15 x Cos 60

+EF = -15 x Cos 60 + 43, 959 x Cos 30°

EF = + 30,570 kN Tie√√

(6)

[14]

OR √√√ √√√

Member	Force -kN	Strut/ Tie
AF	24,042	strut
CF	43,959	strut
EF	30,570	tie

QUESTION 2

2.1

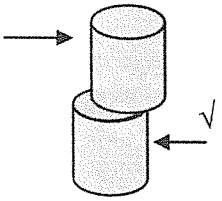

Shearing √

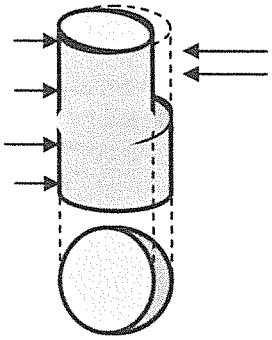

Bearing or Crushing√

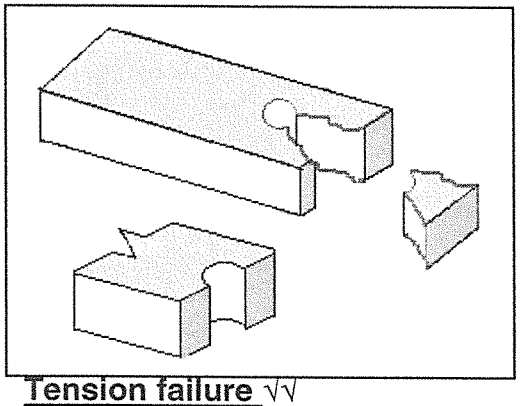

Tension failure √√

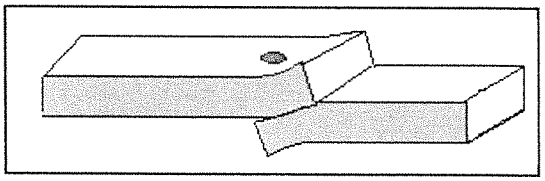

Tearing √

(8)

2.2 1. $f_{shear} = \frac{Force}{area} = \frac{60.x.10^3}{\pi.x.11^2}$ √√ = **157,84 MPa**√√

2. $f_{crush} = \frac{Force}{area} = \frac{60.x.10^3}{22.x.16}$ √ = **170,45 MPa**√√

3. $f_{tear} = \frac{Force}{area} = \frac{60.x.10^3}{(80.x.16).-.1(22.x.16)}$ √√ = **64,655 MPa**√√

Max allowable stress = 64,655 MPa√

(12)
[20]

QUESTION 3

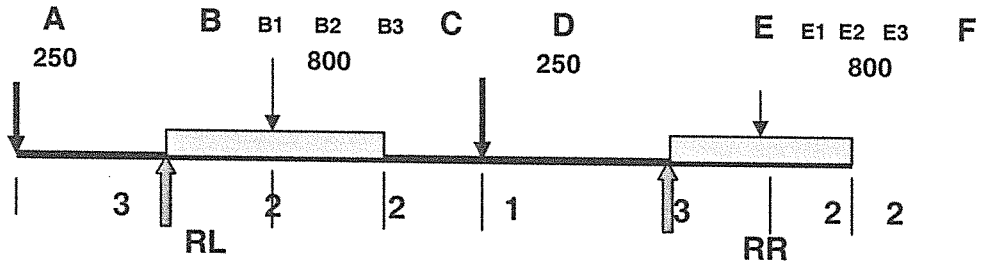

3.1 Take Moments at RL : ACW = CW

(Rx8) + (250x3) = (800x2) + (250x5)+(800x10)

R = 1 262,5 kN√

Take moments at RR : CW = ACM (Neem Moment om RR)

(Lx8) (800x2) = (250x3) +(800x6) +(250x11)

L = 837,5 kN√ (2)

3.2 Calculate Shear force Maximum

At A; -250 down = -250 KN √

B; -250 + 835,5 = +587,5√

B-C; +587,5 – 800 = - 212,5√

D; -212,5 – 250 = -462,5√

E; -462,5 + 1262,5 = 800√ Max √

E-F; +800 – (4x200) = 0 (6)

Calculate Bending Moment Maximum

A; 0 kN

B; -250x3 = -750 kNm√

B_1

B_2 -250x5 + 837,5x2 – 200x2x1 = +25

B_3

C; -250x7 + 837,x4 – 200x4x2 = 0√

D: -250x8 + 837,5x5 – 200x4x3 = -212,5 KNm√

E; -250x11 + 837,5x8 – 200x4x6 – 250x3 = -1 600√ Max √

E_1; -200x3x1,5 = - 900

E_2; -200x2x1 = - 400√

E_3; -200x1x0,5 = - 100 kNm

F ; = 0 kNm (6)

3.3 Bending Moment max = Bending stress x Ze

$$Ze = \frac{BMo\ max}{Bending\ stress} = \frac{1\ 600\ kNm\surd}{465\ MPa\surd} = 3\ 440{,}860\ M^3\surd$$ (3)

Select a beam = 305 x 305 x 240 Kg/m√ (1)

3.4 Check the shear stress

$$f_{shear} = \frac{SF\ max}{Area} = \frac{800\surd}{23 \times 352{,}6} = 98{,}65\ MPa\surd$$ (2)

Ze ; 98,65 < 100 MPa√ is OK√ (2)

[22]

Copyright reserved

QUESTION 4

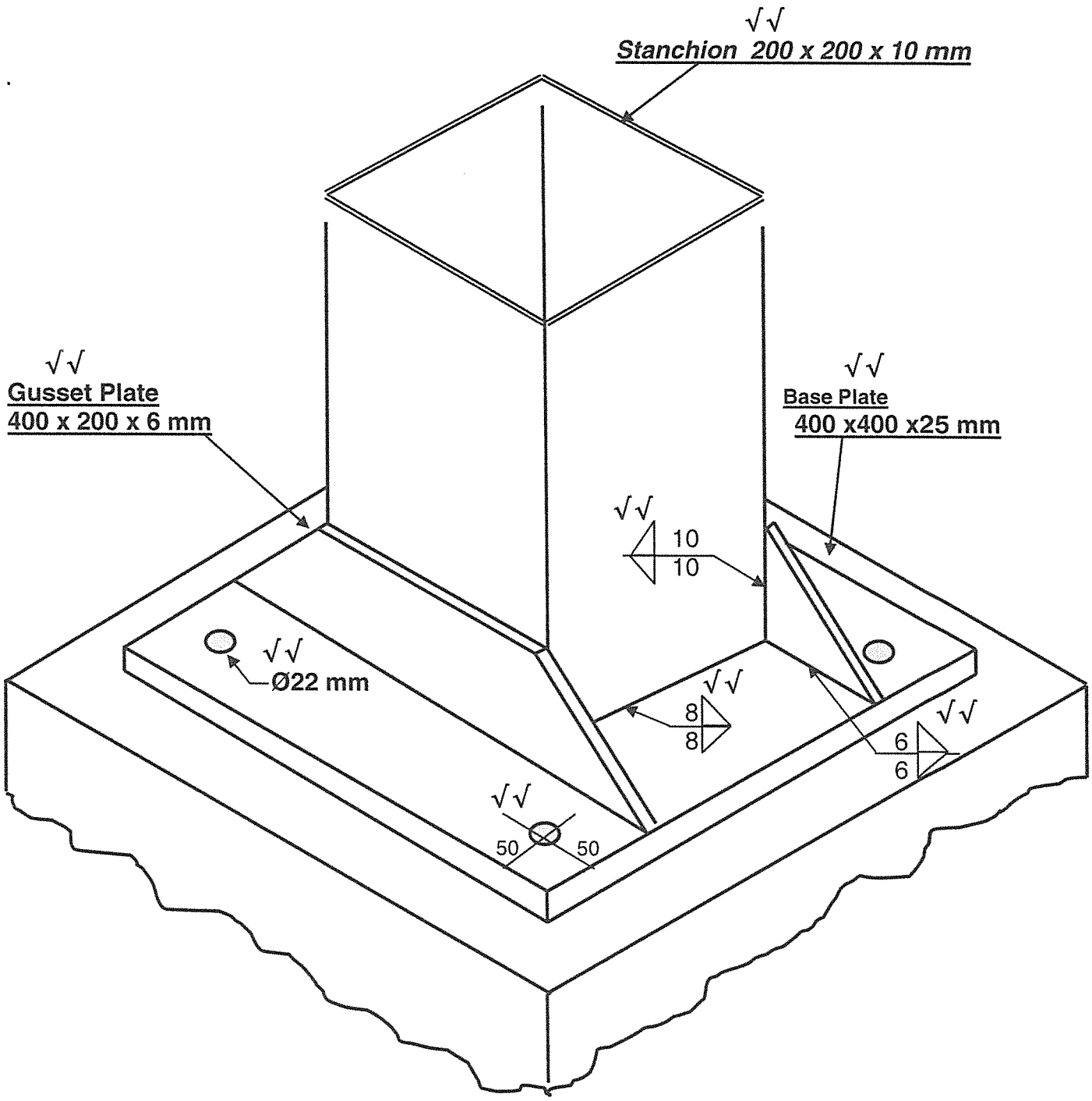

Square Steel Stanchion √
400 x 400 x 25 mm √

Scale 1 : 5 √

[20]

Copyright reserved

QUESTION 5

Drawing (1) + labelling (1) =2x5 = 10

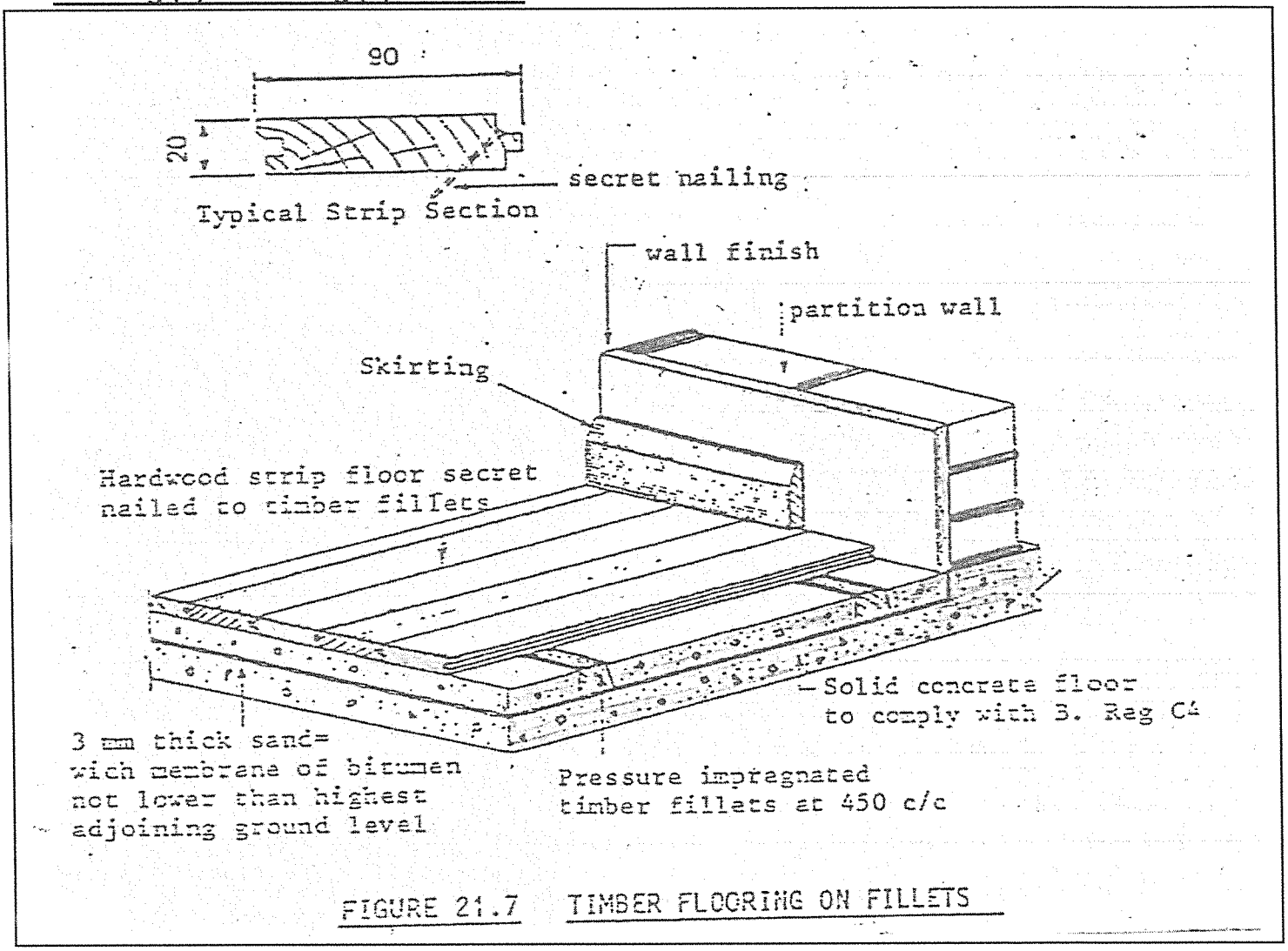

[10]

QUESTION 6

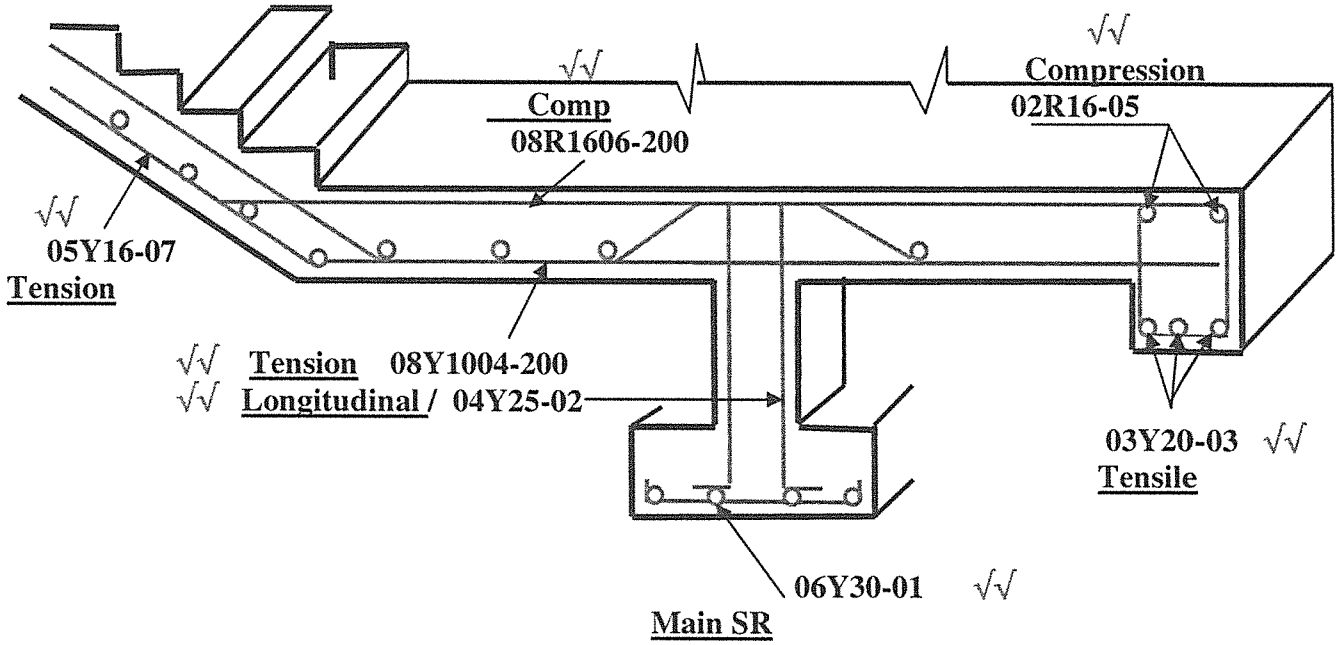

[14]

TOTAL: 100

Copyright reserved