201304T027

higher education & training

Department:
Higher Education and Training
REPUBLIC OF SOUTH AFRICA

T140(E)(M28)T
APRIL EXAMINATION

NATIONAL CERTIFICATE

BUILDING AND STRUCTURAL CONSTRUCTION N5

(8060015)

28 March 2013 (X-Paper)
09:00–13:00

REQUIREMENTS: **Answer book**
Drawing paper
Hot-rolled structural steel sections (BOE 8/2)

Calculators may be used.

This question paper consists of 7 pages, a 1-page formula sheet and a 1-page answer sheet.

Copyright reserved

DEPARTMENT OF HIGHER EDUCATION AND TRAINING
REPUBLIC OF SOUTH AFRICA

NATIONAL CERTIFICATE
BUILDING AND STRUCTURAL CONSTRUCTION N5
TIME: 4 HOURS
MARKS: 100

INSTRUCTIONS AND INFORMATION

1. Answer ALL the questions.
2. Read ALL the questions carefully.
3. Number the answers according to the numbering system used in this question paper.
4. Drawings must be done according to the latest building regulations.
5. Drawings must be fully dimensioned and labelled.
6. Use both sides of the drawing paper if needed.
7. Write neatly and legibly.

Copyright reserved

QUESTION 1: LOADED BEAM

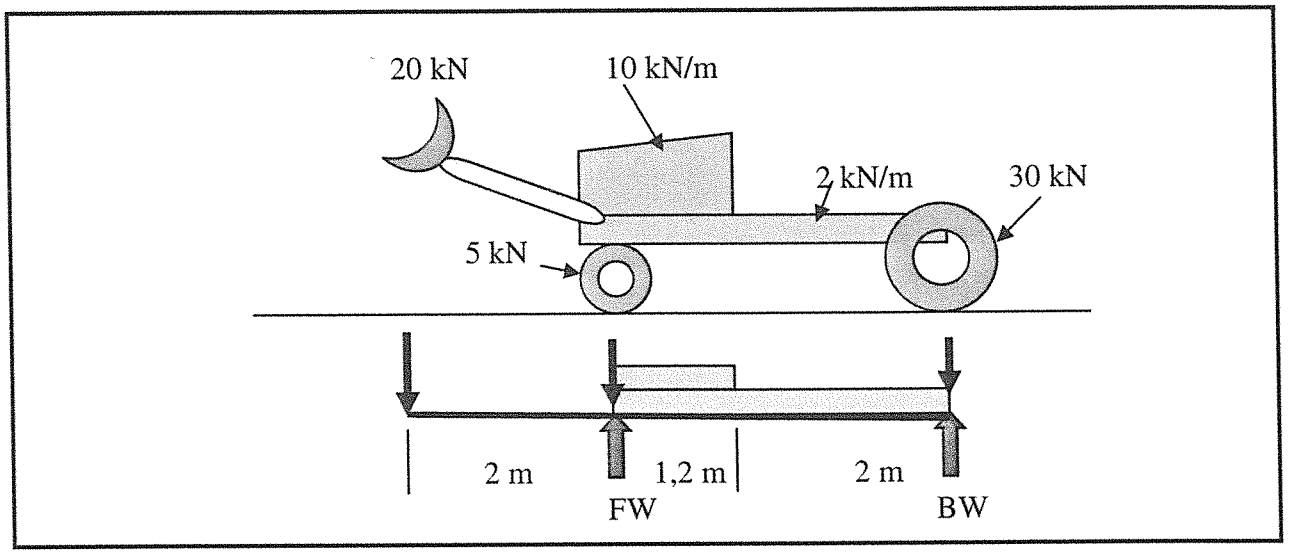

FIGURE 1

FIGURE 1 shows a construction front loader, with the different masses in the scoop, front wheels, engine, chassis frame and back wheels.

Draw the different loads into a loaded beam as shown.

1.1 Calculate the reactions: upward forces at FW and BW. (2)

1.2 Make the necessary calculations and draw to suitable scales a shear force diagram and a bending moment diagram. (6)

1.3 Determine the maximum shear force and bending moment values. (2)

1.4 Select from the steel tables the smallest, suitable I-section with parallel flanges, for the supposed loaded beam.

Investigate with regard to bending and shearing. The maximum bending stress of grade 43 steel is 155 MPa and shear stress is 100 MPa.

NOTE: Ignore the self-weight of the beam. (6)
[16]

Copyright reserved

QUESTION 2: SECTION MODULES

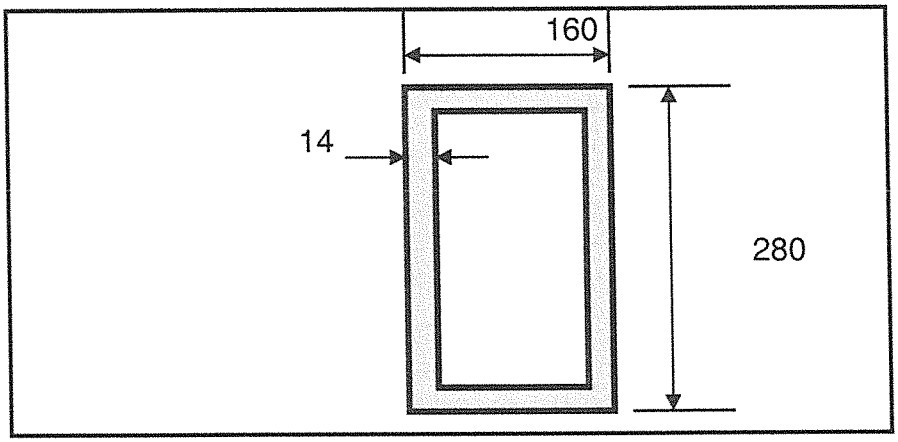

FIGURE 2

FIGURE 2 shows a rectangular hollow cross section through a steel section of a built-up beam. The dimensions are given in mm.

Calculate the following:

2.1 The moment of inertia about the x-x axes (7)

2.2 The section modulus (z) about the x-x axes (3)

2.3 The maximum bending moment if the allowable stress is not to exceed 165 MPa (2)

[12]

QUESTION 3: FRAMEWORK

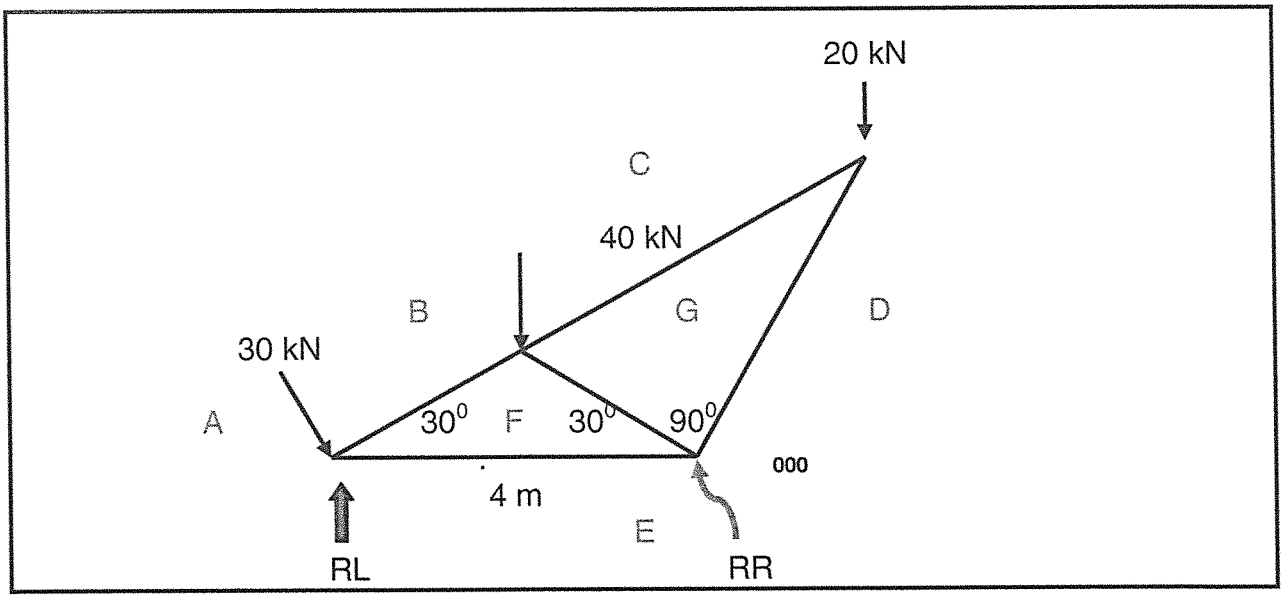

FIGURE 3

Copyright reserved

FIGURE 3 shows a loaded shop roof truss. The roof truss is supported on rollers at RL and is fixed at RR.

Determine the following:

3.1 The magnitude and direction of the reactions, if the roof truss is loaded as shown (8)

3.2 The amount of force in the members of the frame

Tabulate the answers. (Use the TABLE below.)

MEMBER	MAGNITUDE	STRUT/TIE
AE		
BF		
CG		
DG		
EF		
FG		
DE		

(8)
[16]

QUESTION 4

Read and study this question carefully before starting with your answers. The combined drawing of the front view of a concrete and steel structure must be done to scale 1 : 10.

4.1 A pad foundation, of 800 x 800 x 300 mm, with 8Y20-01 reinforcement in both directions, supports an H-profile stanchion. (6)

4.2 The H-profile of 203 × 203 × 53,5 kg/m is 1,5 m high, with a 400 × 400 × 15 mm base plate and two gusset plates of 300 × 300 × 10 mm, which are fixed with fillet welding to the flenses of the stanchion, with a 300 × 300 × 10 mm pressure plate at the top of the stanchion to support a T-beam. (6)

4.3 The concrete T-beam of 350 × 600 mm has 4Y20-02 main reinforcement and 2Y16-03 compression reinforcement. The beam supports a concrete slab of 200 mm thick, which is a cantilever slab at the right side, 1 200 mm long; with 40Y16-04 main steel reinforcement and 35R12-05 compression reinforcement.

The cantilever slab supports a steel staircase. (16)

Copyright reserved

4.4 The steel stair case with a channel iron stringer and four steps are fixed to the end of the cantilever slab with 2 × 16 mm Rawl bolts at each stringer. The rise of the first step starts at the top corner of the cantilever slab and is in line with the vertical end of the cantilever slab.

The staircase has the following specifications:

- Rise: 175 mm (which are open)
- Going: 280 mm
- Wooden treads: 305 x 30 mm
- Stringer: 160 × 65 × 18,8 kg/m channel iron
- Steel plate bracket: Has a waist distance of 50 mm on top of the stringer

This combined drawing must be completely labelled. (8)
[36]

QUESTION 5

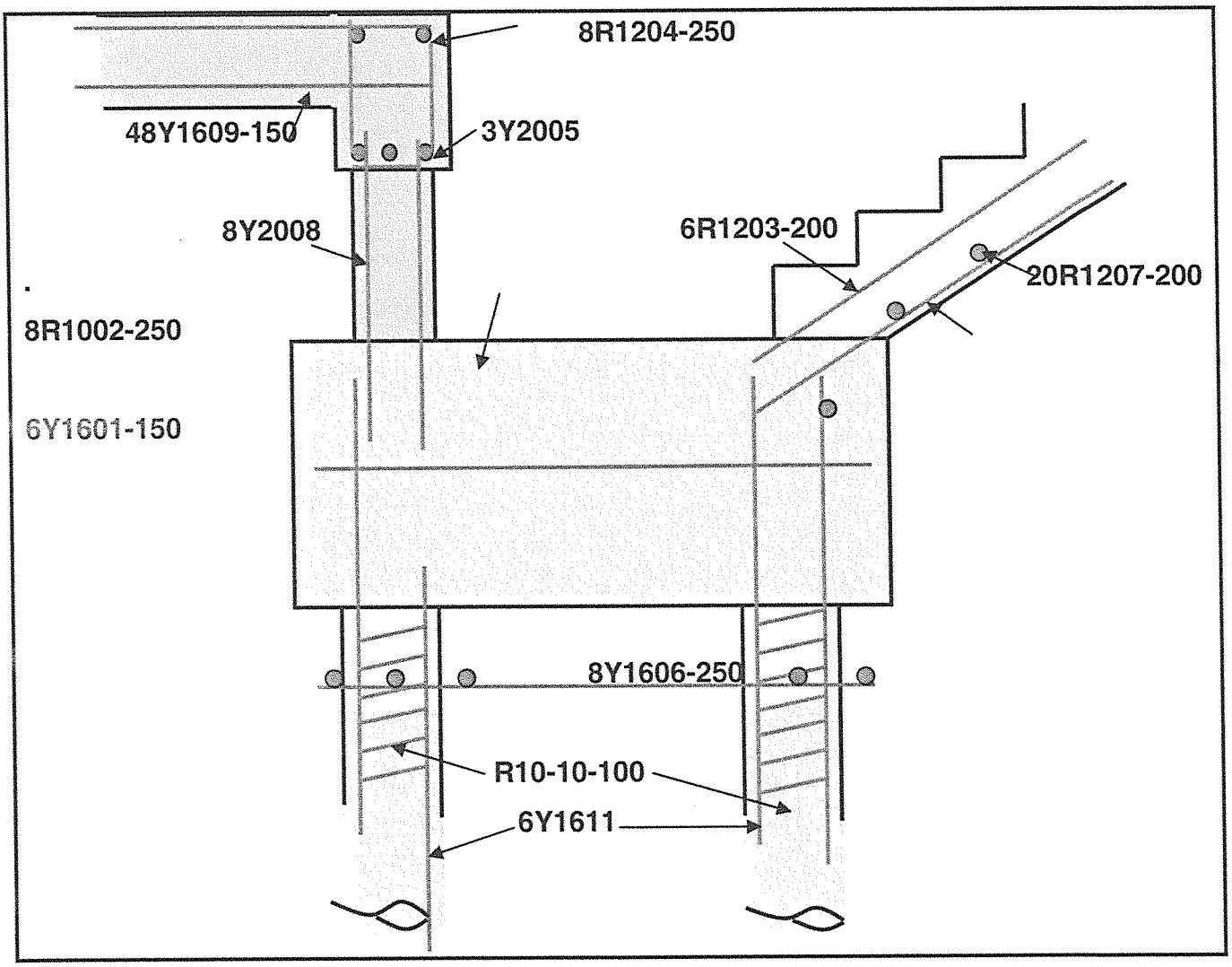

FIGURE 4

Copyright reserved

FIGURE 4 shows a cross section through a concrete structure which includes a pile cap with two piles, a concrete square column which supports an edge beam with a slab to the left. At the right the pile cap supports a concrete staircase.

Study FIGURE 4 and complete the steel schedule, (attached ANSWER SHEET), by booking only the steel with the bar marks 2, 4, 6 and 8.

SPECIFICATIONS

- Staircase is 2 m wide with a slope distance of 2,5 m
- Pile cap is 2 m wide, 3 m long and 1 m thick
- Piles are 1 m in diameter
- Edge-beam is 0,4 × 0,6 × 4 m long
- Column is 1,5 m high (steel has to be 500 mm longer) **[12]**

QUESTION 6

Make TWO neat, simple drawings (NTS) to explain the difference between a *cantilever beam* and a *cantilever retaining wall.*

Indicate where the tension and compression forces are and include also the tension steel reinforcement.

Label the drawings. (4 × 2) **[8]**

TOTAL: 100

Copyright reserved

BUILDING AND STRUCTURAL CONSTRUCTION N5

FORMULA SHEET

Any applicable formula may also be used.

$BM = \frac{wl}{4}$

$BM = \frac{wl^2}{8}$

n = 5d
n = 5.5d

h = 9d
h = 11d

F = f.a

$F = fs\ \frac{\pi D^2 n}{4}$

F = ft (W - n.d)

$F = f_c D.t.n$

$F = \frac{\pi(\phi - 0{,}9382\rho)^2 n}{4}$

$I = \left[\frac{BD^3}{12}\right] + [2area.y^2]$

$\frac{M_r}{I} = \frac{f}{y} = \frac{E}{R}$

M = fZ

$Z = \frac{I_{NA}}{y}$

$M = f\frac{I}{y}$

$M = \frac{fbd^2}{6}$

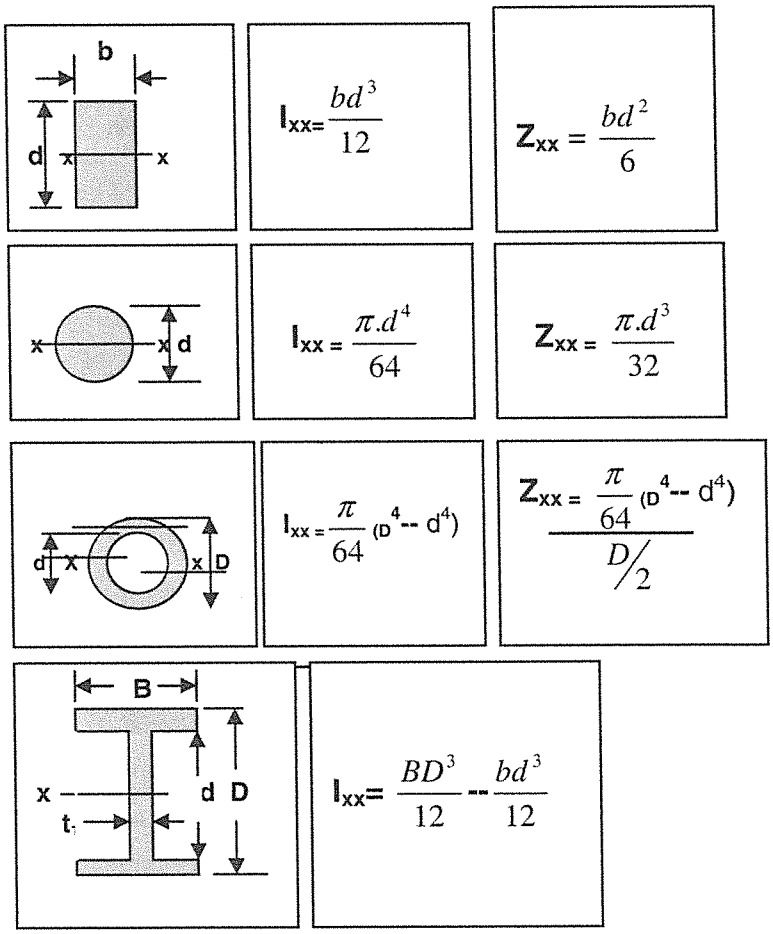

Copyright reserved

ANSWER SHEET **EXAMINATION NUMBER:**

QUESTION 5

1 Member	2 Bar mark	3 Type and size	4 Number of members	5 Number in each	6 Total number	7 Length of each bar	8 Shape

[12]

This page must be included in the ANSWER BOOK.

Copyright reserved

higher education & training

Department:
Higher Education and Training
REPUBLIC OF SOUTH AFRICA

MARKING GUIDELINE

NATIONAL CERTIFICATE

APRIL EXAMINATION

BUILDING AND STRUCTURAL CONSTRUCTION N5

28 MARCH 2013

This marking guideline consists of 10 pages.

Copyright reserved

QUESTION 1

1.1 Take Moments at L LCW = RCW

$$(R \times 3,2) + (20 \times 2) = (30 \times 3,2) + (2 \times 3,2 \times 1,6) + (10 \times 1,2 \times 0,6)$$

R = 22,95 kN

Take Mo at R; CLW = ACW

$$(L \times 3,2) = (2 \times 3,2 \times 1,6) + (10 \times 1,2 \times 2,6) + (5 \times 3,2) + (20 \times ,2)$$

L = 50,45 kN (2)

1.2

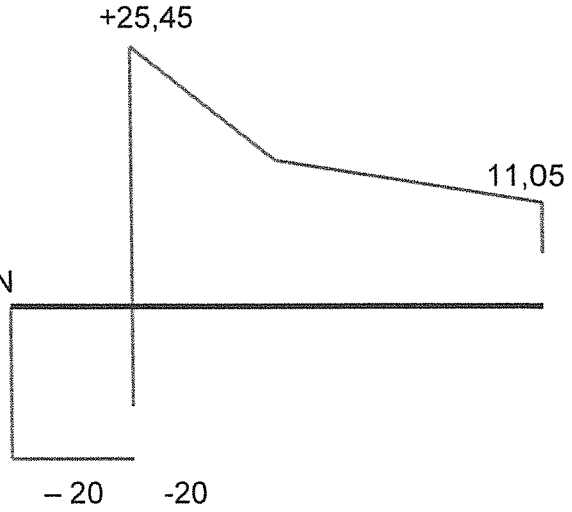

Calculate the **shear force**

At **A** = 0 - 20 = 20 kN

B = -20-5 +5 0,45 = 25,45 kN

7,05

At B-C = + 25,45- 12-24 = +11,05 kN

C-D = +11,05 - 4 = +7,05 kN

At D = +7,05 – 30+ 22,95 = 0

. **Shear force Max = 11 kN**

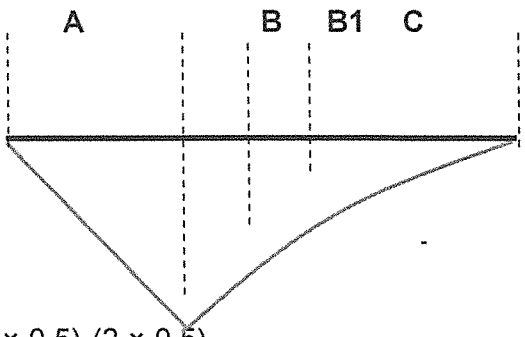

Calculate the **B Mo max**

BMo at A = 20 × 0 = 0 kNm

BMo at B = -20 × 2 = -40 kNm

BMo at B_1 = -(20 × 3)+(5 × 1) + (50,45× 1)-(10 × 0,5)-(2 × 0,5)

= +20,55 kNm

BMo at C = -(2 0× 3,2)+(5 × 1,2) - (10 × 1,2 × 0,6)-(2 × 1,2 × 0,6) + (50,45 × 1,2)

= -18,1 kNm

BMo at D = -0 kNm (6)

1.3 BMax = 40 kNm (2)

1.4 Select an I-section Taper Flanges

B Mo max = Bending Stress x Ze

Thus: $Ze = \frac{\text{B Mo max}}{\text{Bending stress}} = \frac{40 \times 10^3 \text{ kNm}}{155 \text{ MPa}}$

$= \frac{12 \times 10^3 \text{ Nm}}{155 \times 10^6 \text{ N/m}}$ √

$Ze = 258{,}0645 \times 10^{-6} \text{ m}^3$

Select a beam (I-section Parallel) = 203 × 133 × 29,8 Kg/m √

Check for shear stress;

Shear stress = $\frac{\text{Shear Load}}{\text{Area}}$

$= \frac{25{,}45 \text{ kN}}{(206{,}8 \times 6{,}3) \text{ mm}^2} = \frac{25{,}45 \times 103\text{N}}{(206{,}8 \times 6{,}3) \text{ mm}^2}$ √

= **19,534 N/mm²** also (MPa) √

THUS: 100 > 19,534 Sufficient √ (6)

[16]

QUESTION 2: SECTION MODULES

	Area	Y-Dist	A x Y	$\frac{bh^3}{12}$	Dist to NA (d)	A x d^2
1	44800	140	6272000	292693333,3	0	0
2	-33264	140	-4656960	-176033088	0	0
	Σ11536		Σ1615040	Σ116660245,3		Σ

2.1 $Y = \frac{\Sigma A \times Y}{\Sigma A}$

$Y = \frac{1615040}{11534}$

Y = 140 mm (7)

2.2 $Ixx = \sum (I_{NA} + Ad^2)$
$= 116660245,3+0$
$= 116660245,3\ mm^4$
$Ixx = 116,66 \times 10^{-6}\ mm^4$ (3)

2.3 $Z = {}^{I}/_{Y}$ BMomax = stress x Ze

$Z = \frac{116660245}{140}$ $= 165MPa \times 833287,4664\ mm^3$

$Z = 833287,4664\ mm^3$ $= 137492432,0$
$= 137,492432\ kNm$ (2)
[12]

QUESTION 3: FRAMEWORK

3.1

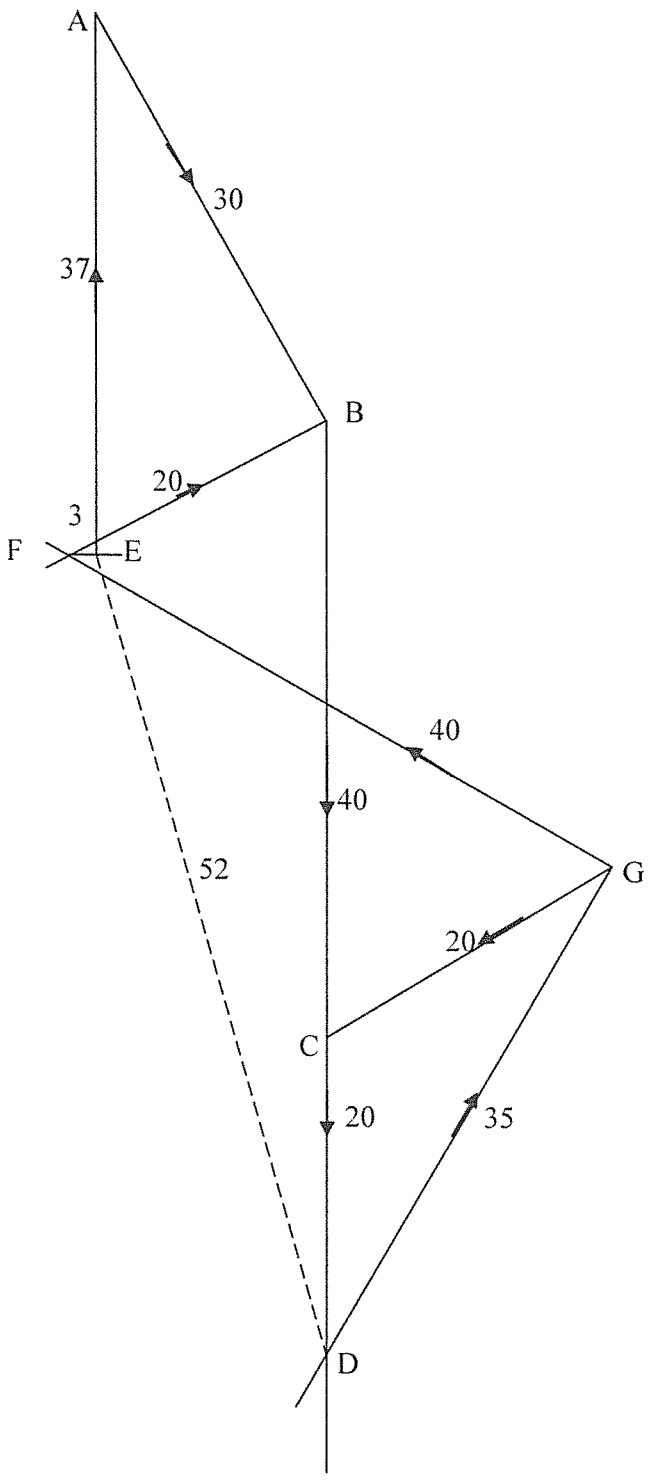

(8)

3.2

Member	Magnitude	Strut/tie
AE	37	Strut/RL
BF	20	Strut
CG	20	Tie
DG	35	Strut
EF	3	Strut
FG	40	Strut
DE	52	Strut/Result

(8)
[16]

QUESTION 4

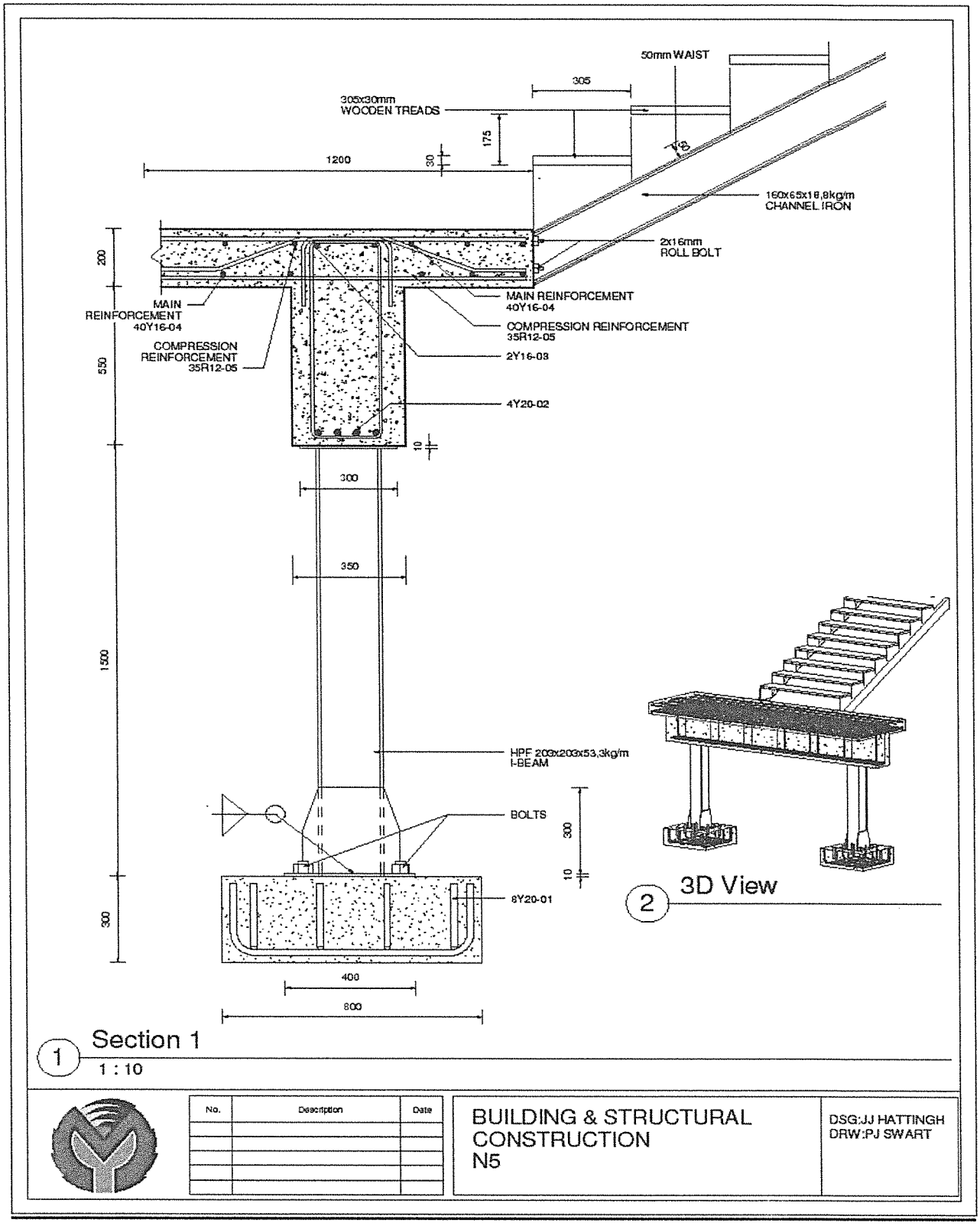

Copyright reserved

Additional drawing for further simplicity

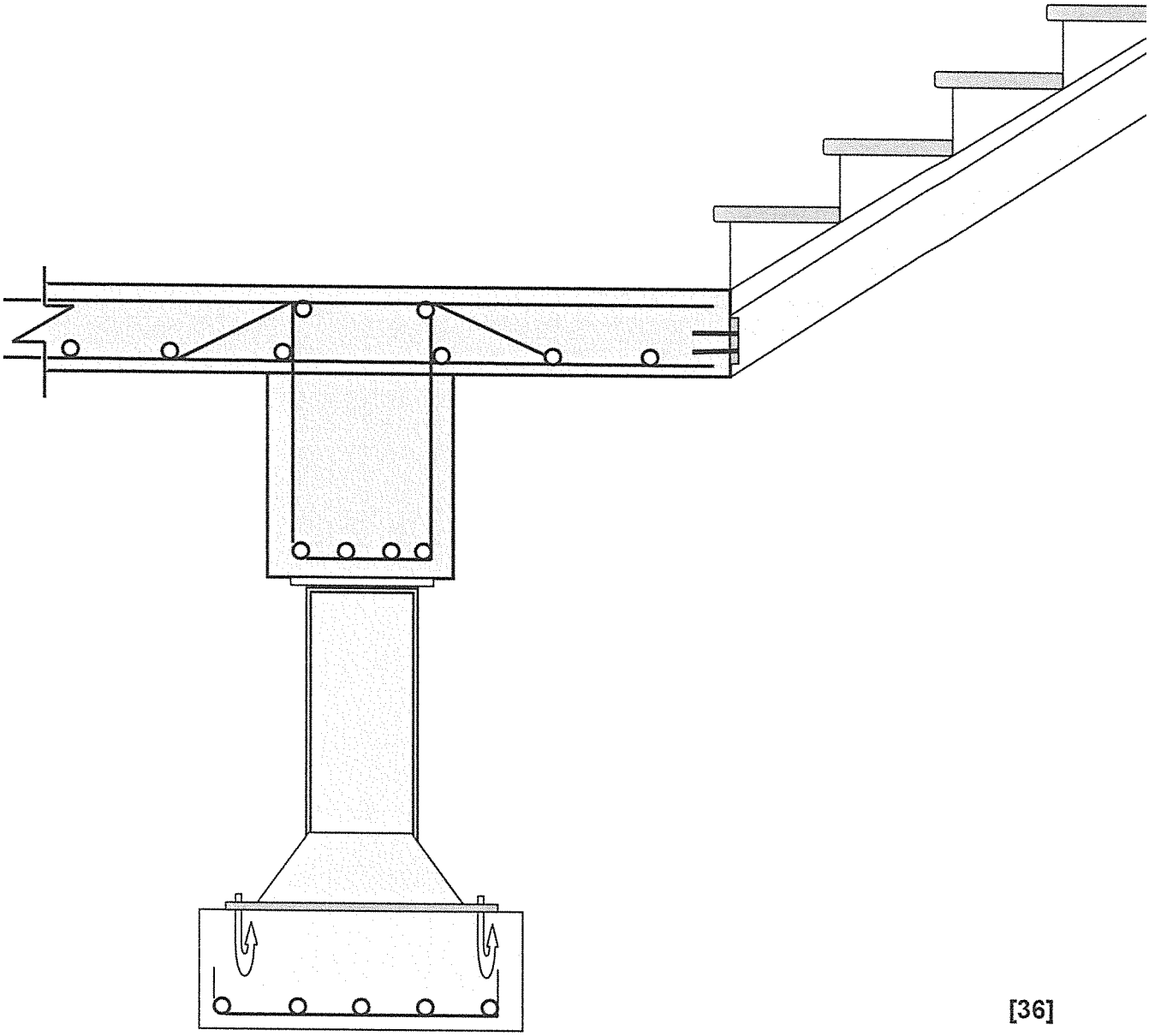

[36]

Copyright reserved

QUESTION 5

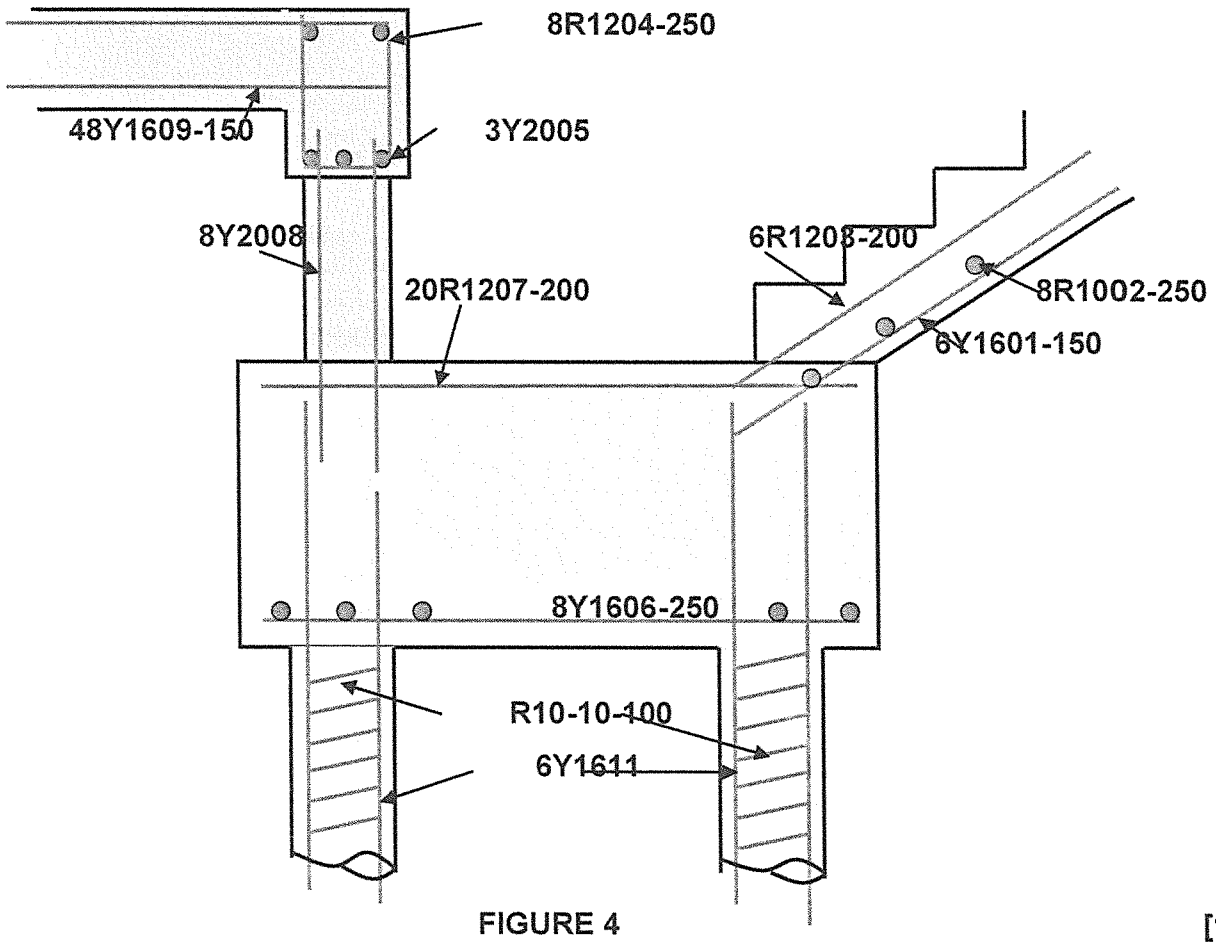

FIGURE 4 [12]

QUESTION 6

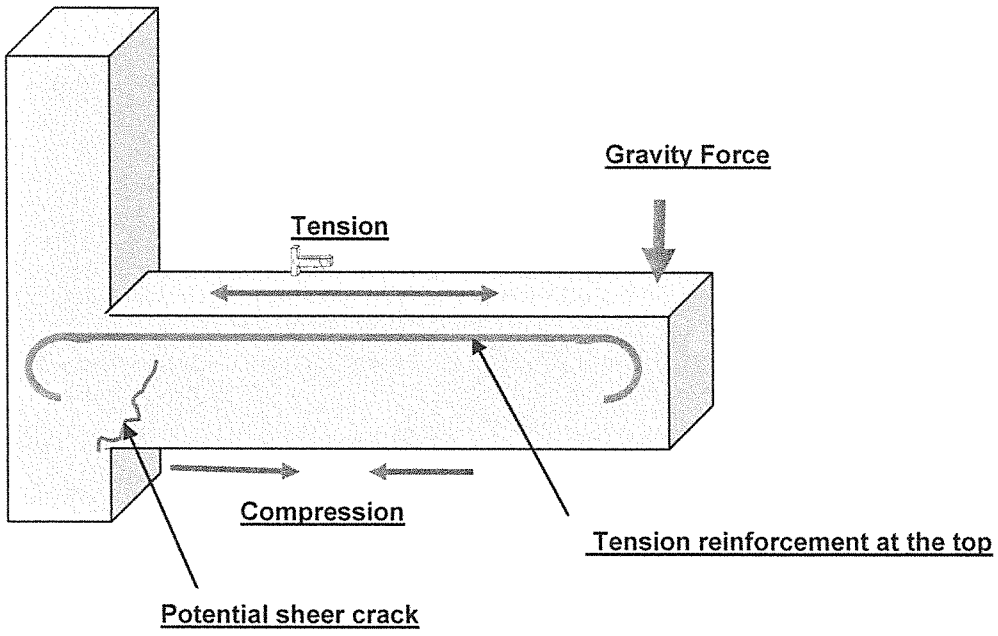

Cantilever Beam under load

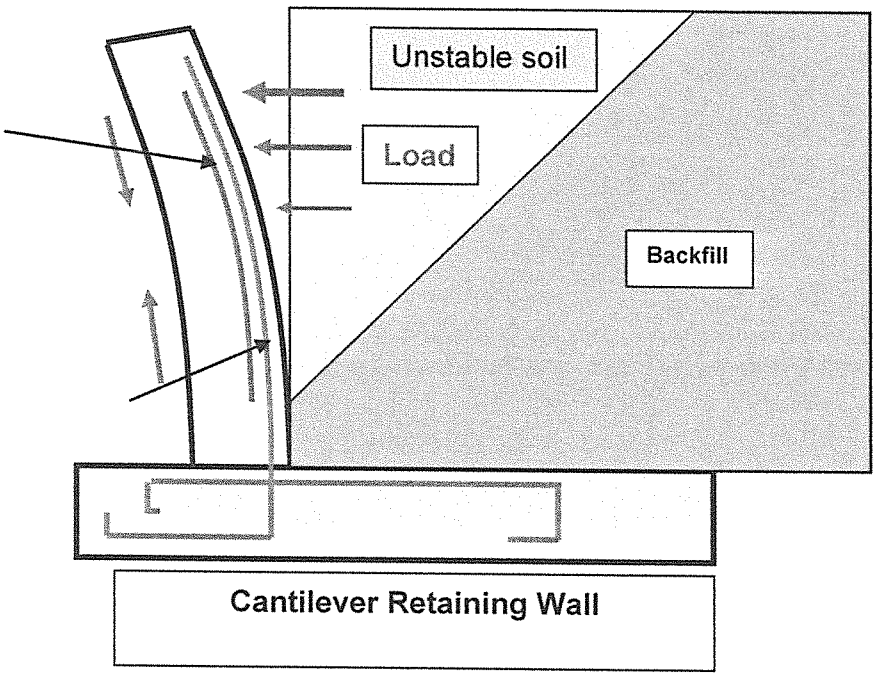

(4 × 2) **[8]**

TOTAL: 100

Copyright reserved