higher education & training

Department:
Higher Education and Training
REPUBLIC OF SOUTH AFRICA

MARKING GUIDELINE

NATIONAL CERTIFICATE

BUILDING AND STRUCTURAL CONSTRUCTION N4

10 August 2021

This marking guideline consists of 7 pages.

Copyright reserved

QUESTION 1

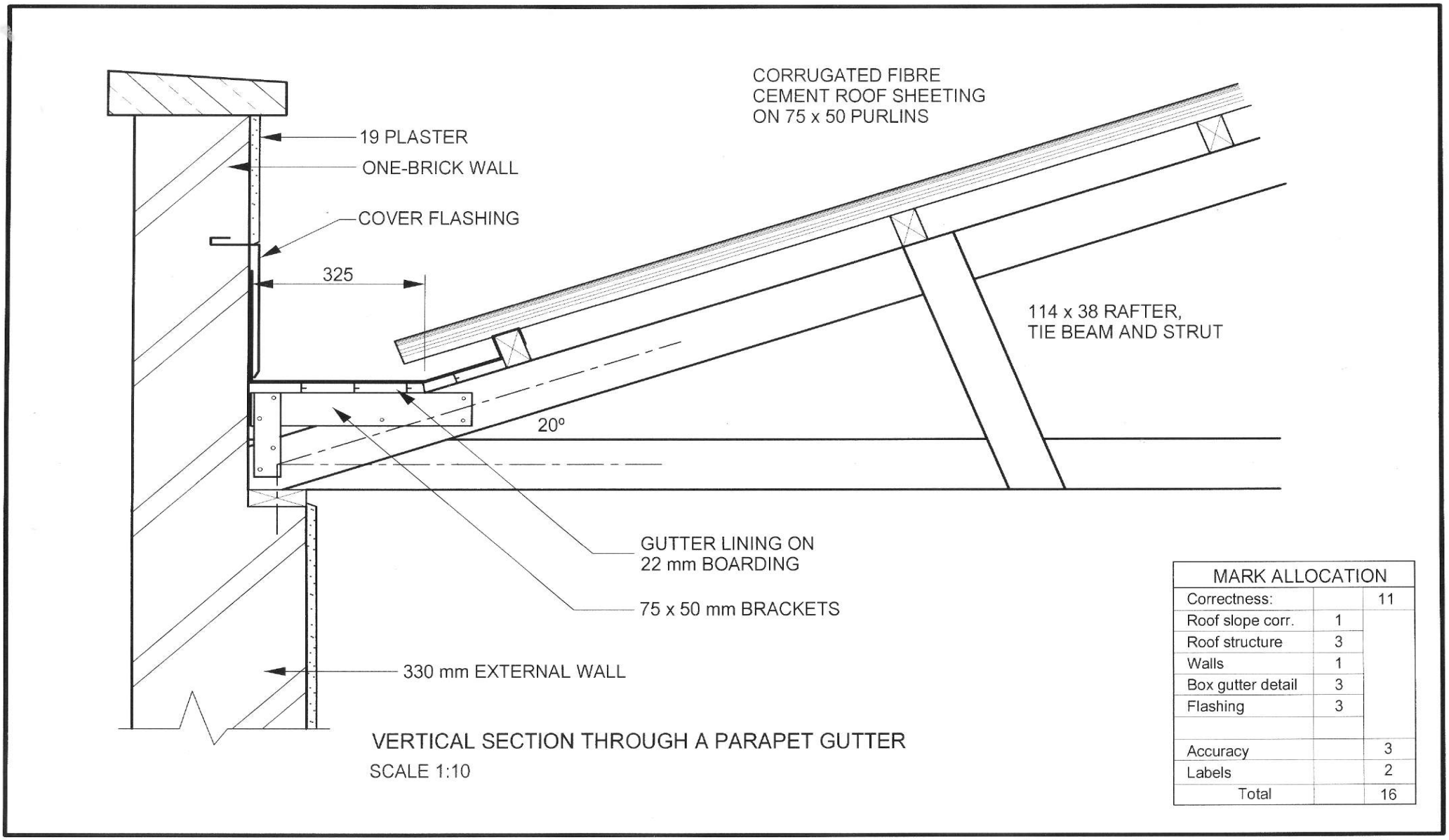

MARK ALLOCATION		
Correctness:		11
Roof slope corr.	1	
Roof structure	3	
Walls	1	
Box gutter detail	3	
Flashing	3	
Accuracy		3
Labels		2
Total		16

Copyright reserved

QUESTION 2

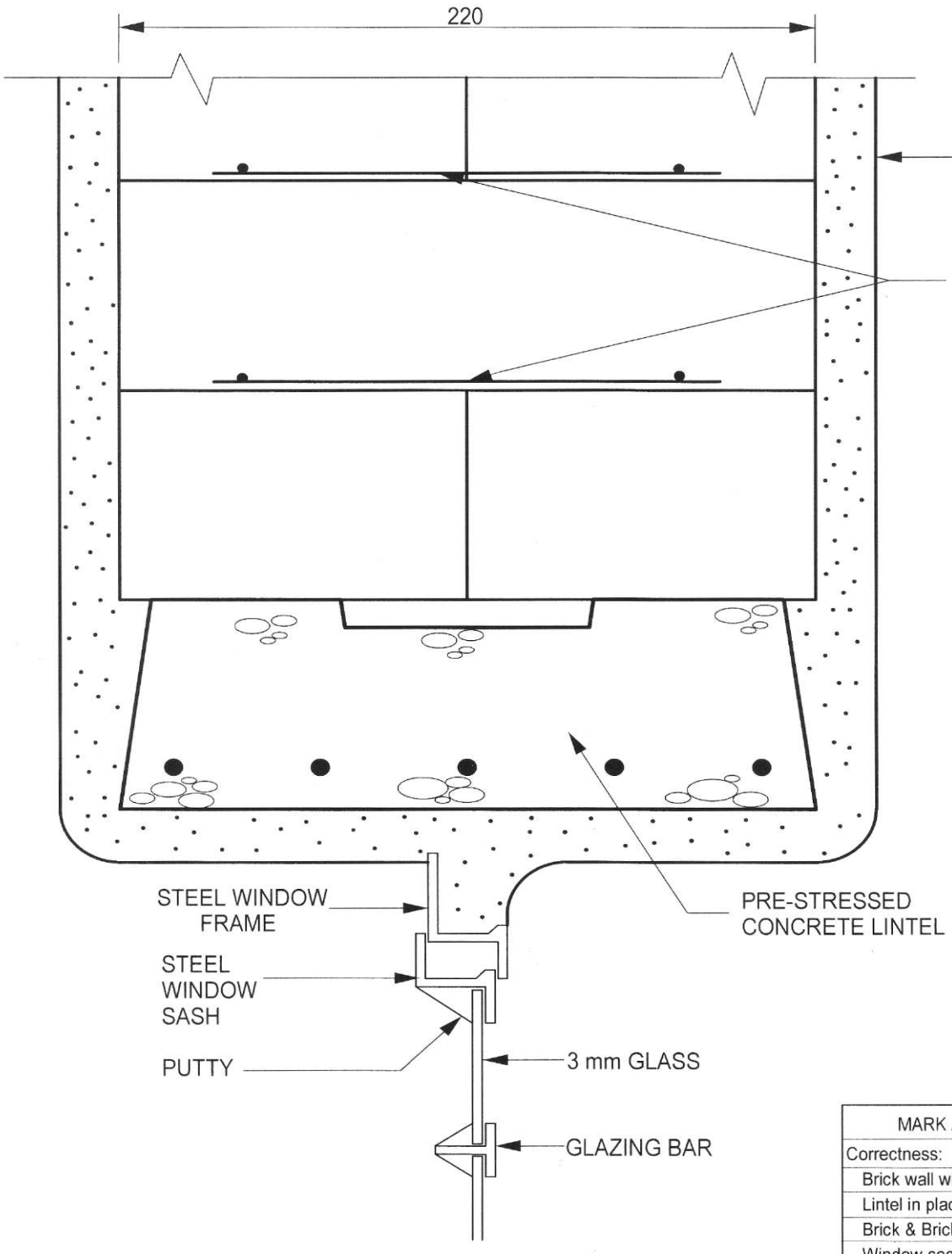

VERTICAL SECTION THROUGH STEEL CASEMENT WINDOW BUILT INTO A ONE-BRICK WALL

SCALE 1:2

MARK ALLOCATION		
Correctness:		10
Brick wall width corr.	1	
Lintel in place	1	
Brick & Brickforce	2	
Window sections corr.	3	
Glass & putty	1	
Glazing bar	2	
Accuracy		2
Plaster		1
Labels		2
Total		15

Copyright reserved

QUESTION 3

MARK ALLOCATION	
Roof angle corr.	1
Roof parts	4
Flashing	3
Wall Plate	1
Accuracy	3
Labels	2
Total	14

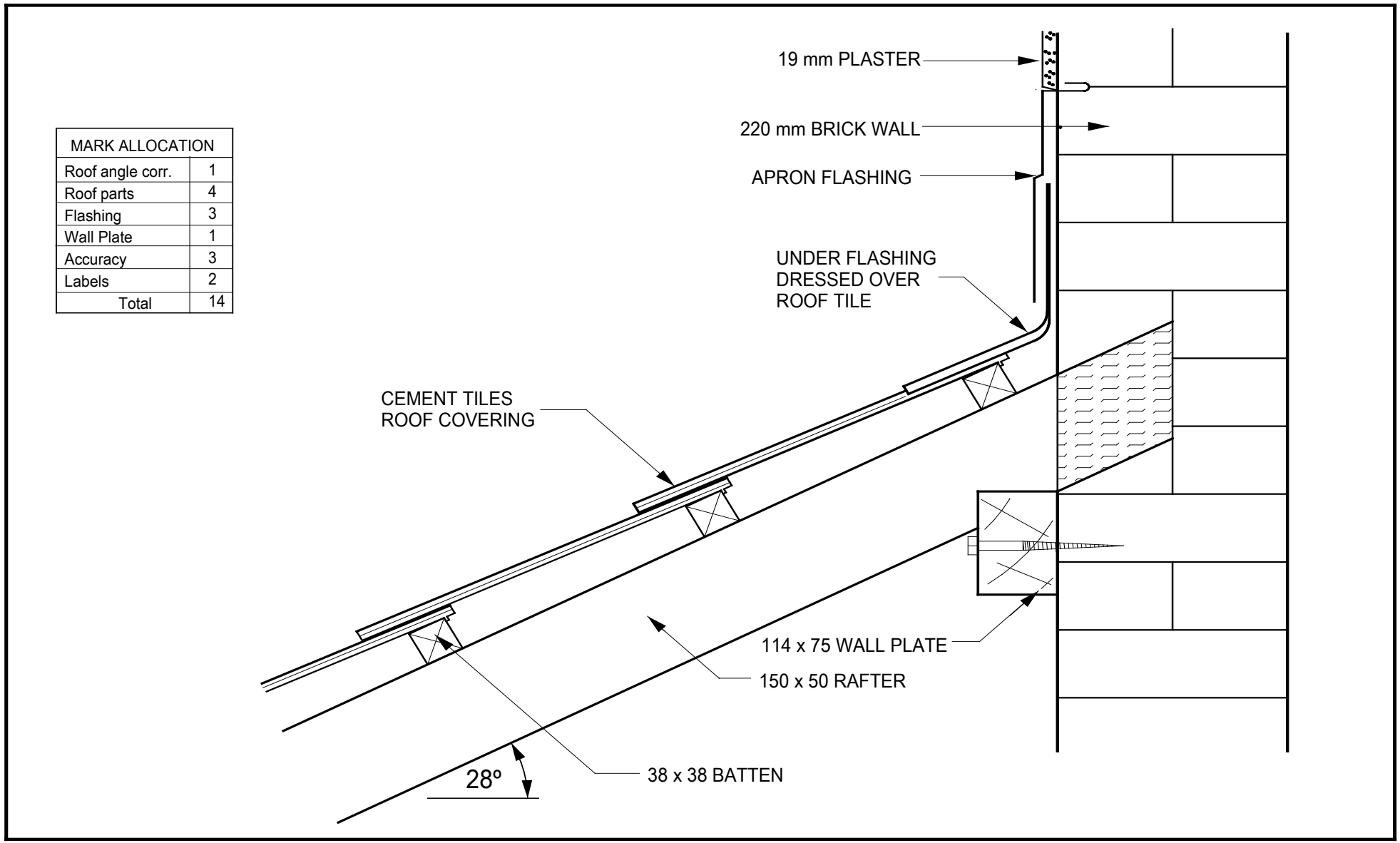

Copyright reserved

QUESTION 4

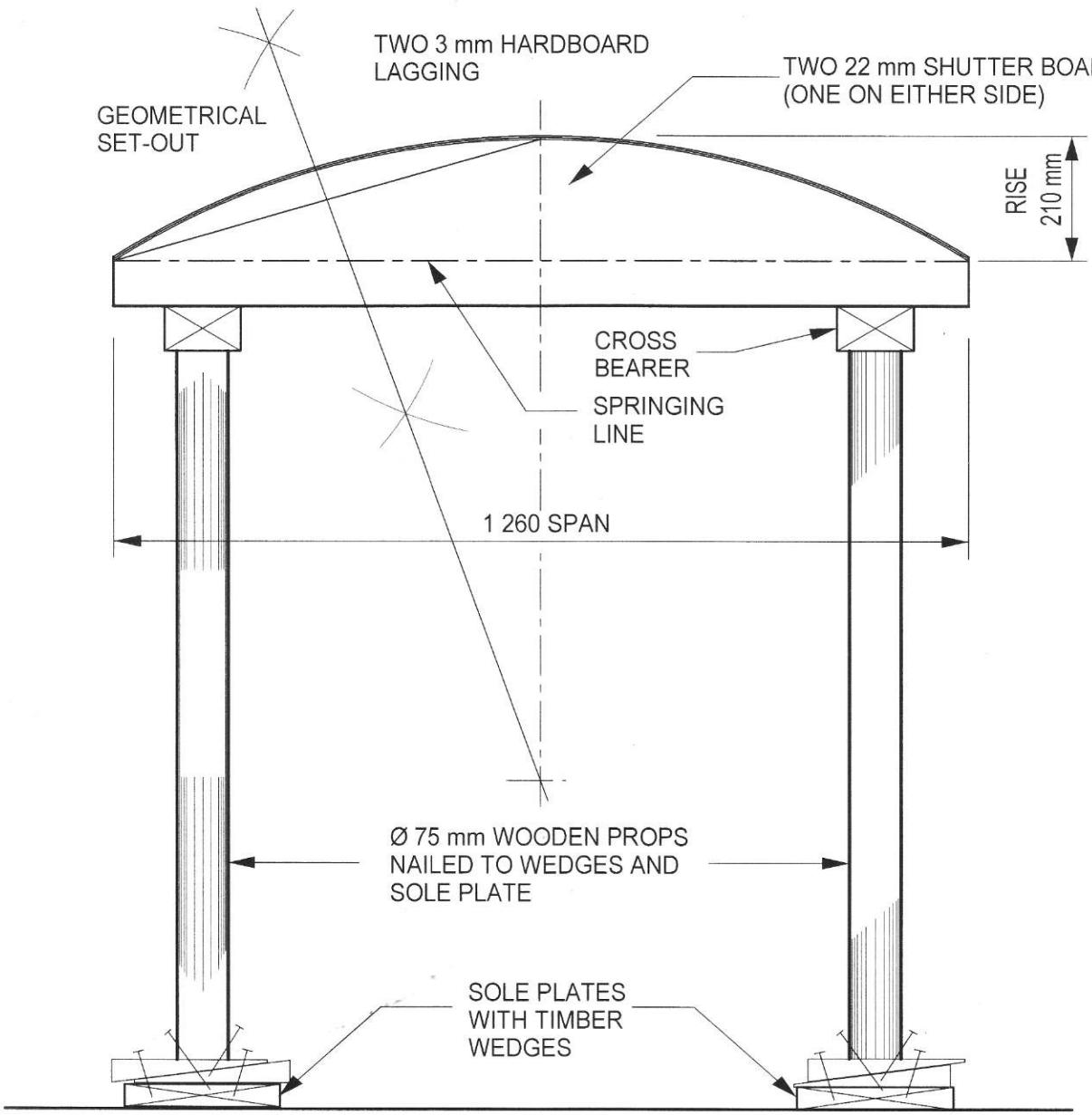

TIMBER CENTERING FOR A LIGHT SEGMENTAL ARCH
SCALE 1:10

MARK ALLOCATION		
Correctness:		10
Span & Rise corr	1	
Geom set-out	2	
Turning piece	2	
Closed lagging	2	
Wooden props	3	
Accuracy		2
Lables		1
Dimensions		2
Total		15

Copyright reserved

QUESTION 5

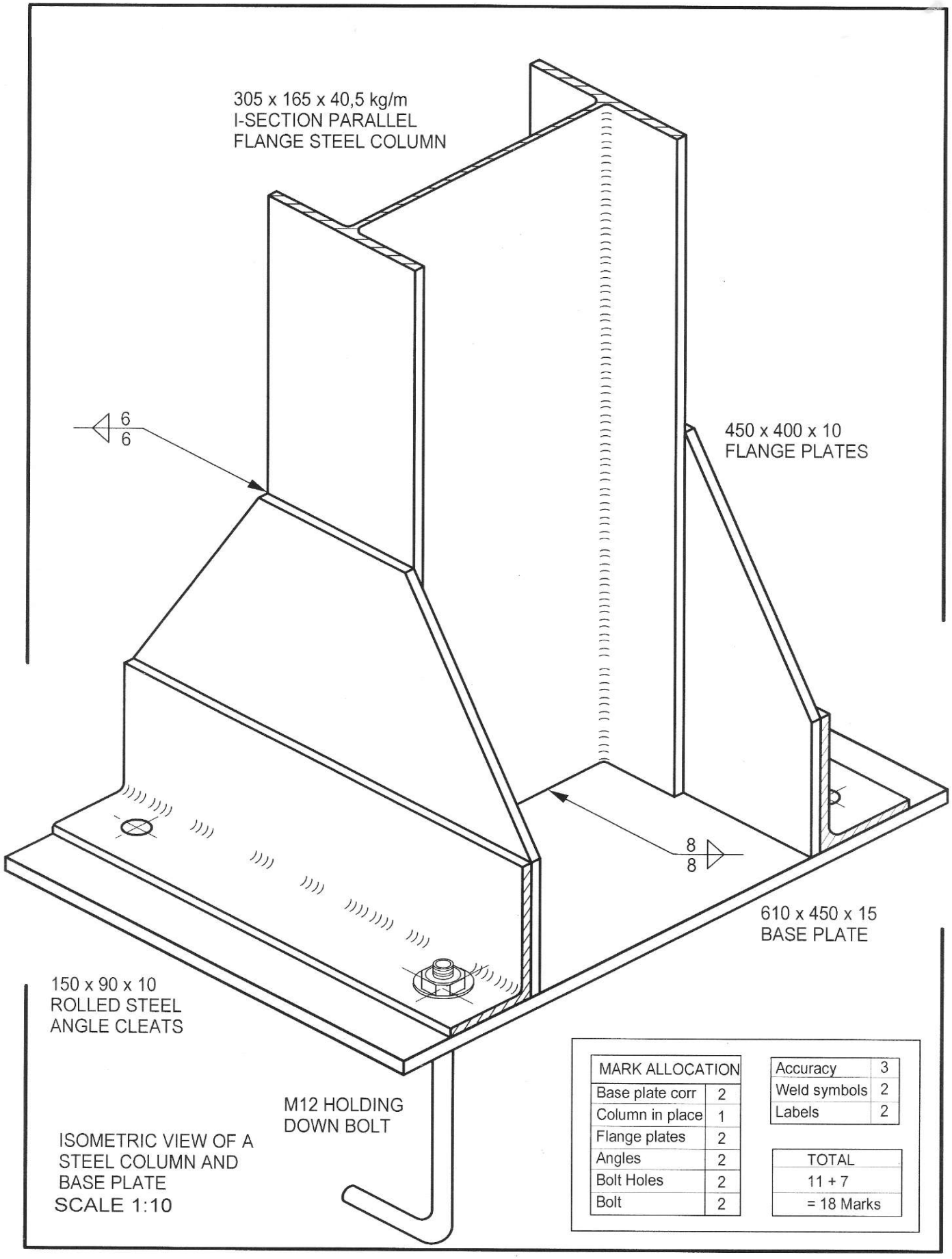

MARK ALLOCATION	
Base plate corr	2
Column in place	1
Flange plates	2
Angles	2
Bolt Holes	2
Bolt	2

Accuracy	3
Weld symbols	2
Labels	2

TOTAL
11 + 7
= 18 Marks

Copyright reserved

QUESTION 6

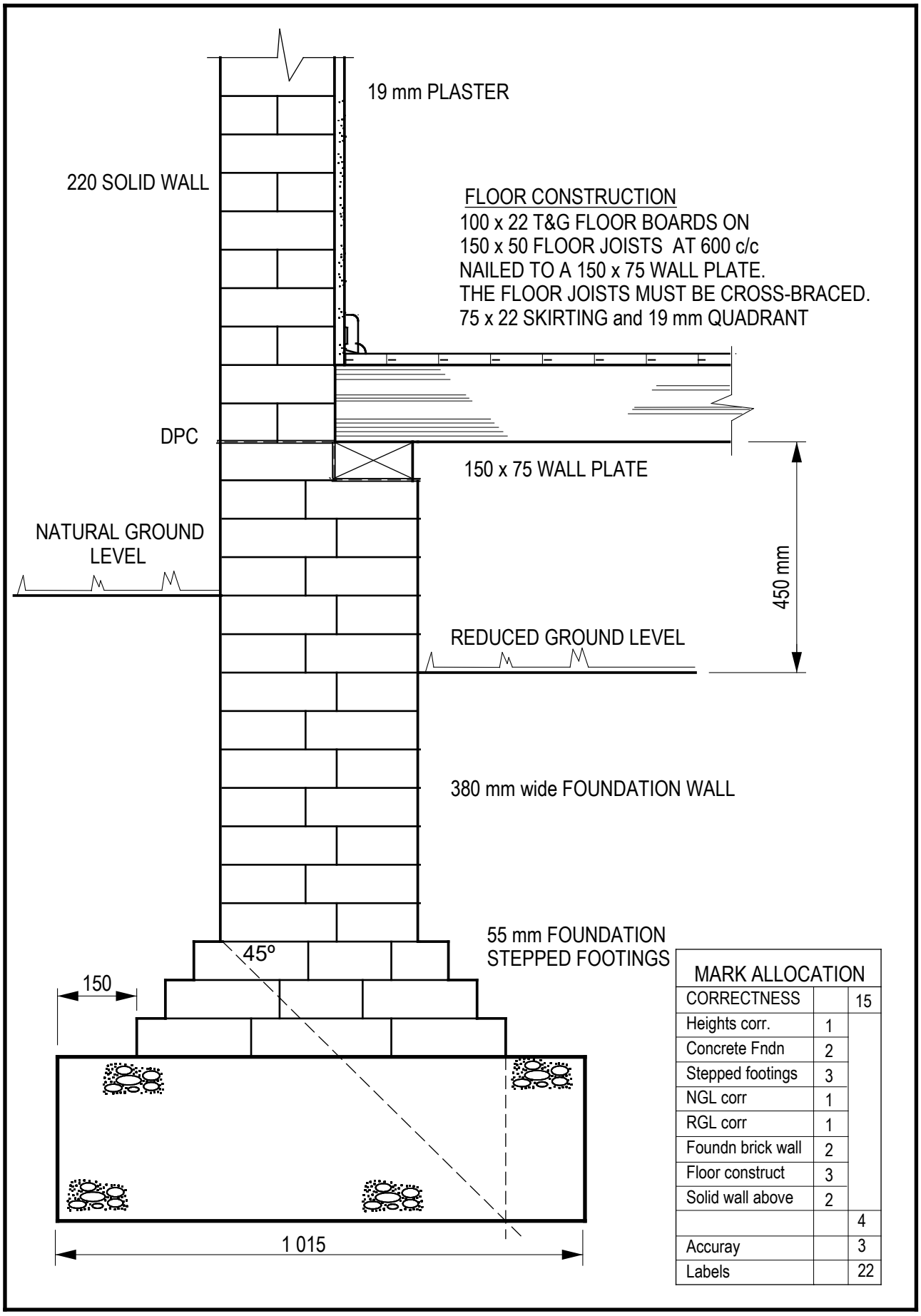

MARK ALLOCATION		
CORRECTNESS		15
Heights corr.	1	
Concrete Fndn	2	
Stepped footings	3	
NGL corr	1	
RGL corr	1	
Foundn brick wall	2	
Floor construct	3	
Solid wall above	2	
		4
Accuray		3
Labels		22

Copyright reserved