higher education & training

Department:
Higher Education and Training
REPUBLIC OF SOUTH AFRICA

MARKING GUIDELINE

NATIONAL CERTIFICATE

BUILDING AND STRUCTURAL CONSTRUCTION N4

2 AUGUST 2018

This marking guideline consists of 15 pages.

Copyright reserved

QUESTION 1: BRICK BONDING

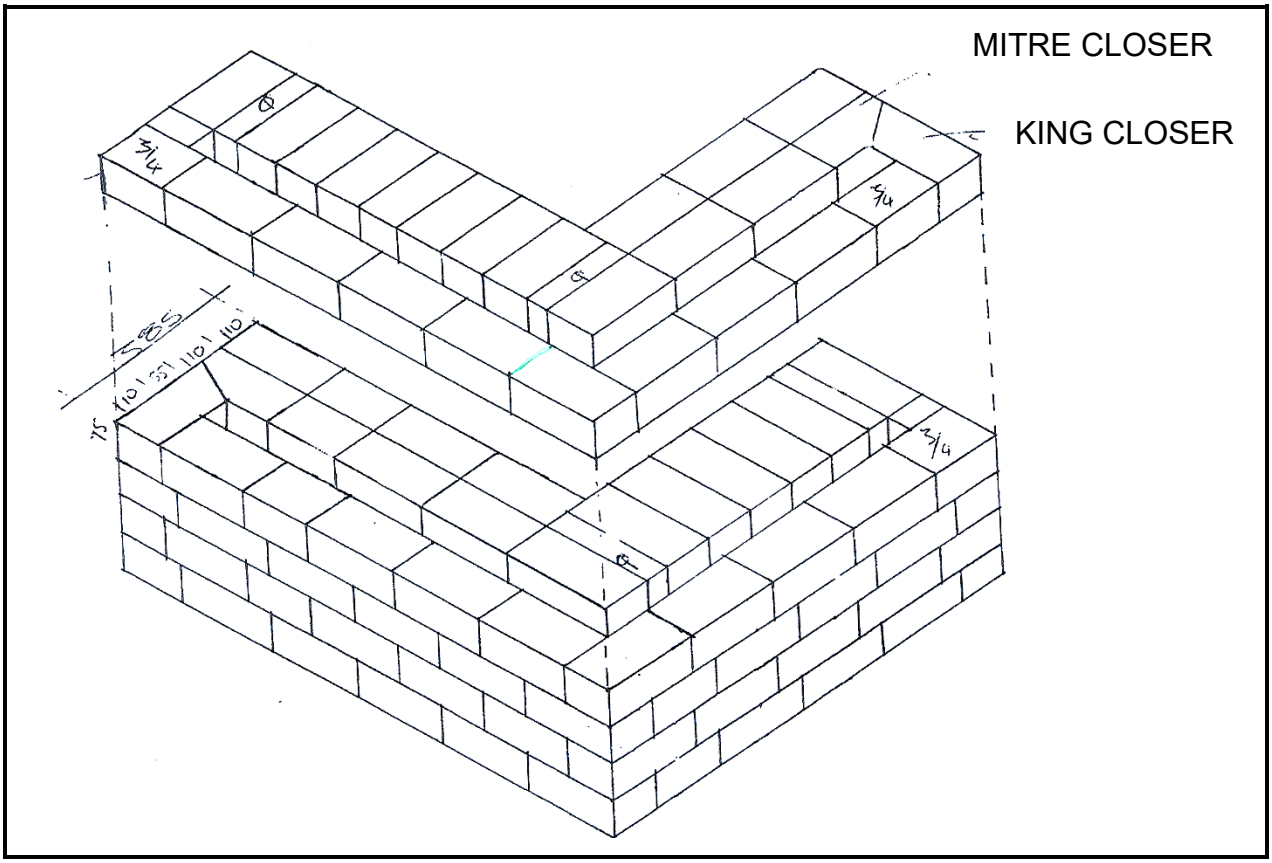

SCALE 1 : 10

SEE DRAWINGS FOR MODEL ANSWER.

RUBRIC FOR DRAWING QUESTION 1			
PART OF THE DRAWING	**MARKING CRITERIA**	**POSSIBLE MARK**	**REMARKS**
Course A	Correct position	1	Isometric view and 385 mm brick corner
	Brick pattern	1	English bond and cavity wall
	Brick size	1	
	Stopped ends	3	Queen closure, king closure, mitre
Course B	Correct position	1	Isometric view and 385 mm brick corner
	Brick pattern	1	English bond and cavity wall
	Brick size	1	
	Stopped end	3	King closure, queen closure, mitre
	Alignment of plan views	1	
	Labelling	3	
	Dimensions	2	
	Accuracy	5	
	Line work	3	
	Neatness	2	
	Title	1	
	Scale	1	
	Subtotal	30	
	Divide by	**3**	
	TOTAL:	**10**	

NOTE: NO marks should be allocated for any part of the drawing in the incorrect position but marks should be allocated for hatching of that component.

Marks should be allocated for neatness, correct title and scale if the drawing is completely incorrect. **[10]**

Copyright reserved

QUESTION 2: STEEL DOORFRAMES

2.1 2.1.1 The hinge jamb is the vertical upright on which the hinges are mounted.

2.1.2 The lock jamb is the vertical upright on which the lock-catch plate is mounted.

2.1.3 The rubber stop is a small rubber cushion mounted in the jambs to absorb the shock when closing or slamming the door.

2.1.4 The tie bar is the bar at the bottom of the frame which keeps the jambs in the position.

2.1.5 Fixing lugs are the flat metal strips fixed to the frame to hold the frame firmly to the wall.

(5 × 2) (10)

2.2

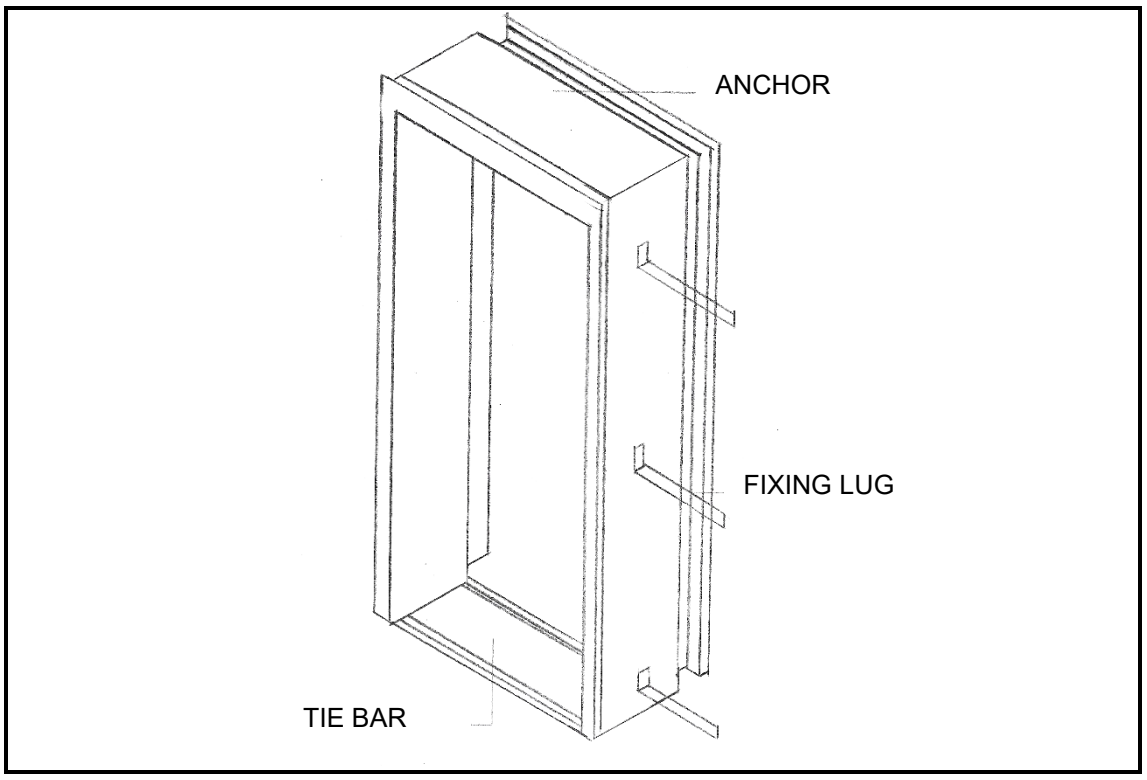

DOORFRAME
SCALE 1 : 5

(10)

SEE DRAWINGS FOR MODEL ANSWER.

RUBRIC FOR DRAWING QUESTION 2			
PART OF THE DRAWING	**MARKING CRITERIA**	**POSSIBLE MARK**	**REMARKS**
Steel doorframe	Correct drawing	1	Isometric view of steel door
	Correct shape	1	
	Labelling	1	
Fixing lug	Correct position	1	
	Correct shape	1	
	Labelling	1	
Tie bar	Correct position	1	
	Correct shape	1	
	Labelling	1	
Anchor	Correct position	1	
	Line work	**5**	
	Accuracy	**5**	
	Neatness	**3**	
	Title	**1**	
	Scale	**1**	
	Subtotal	**25**	
	Divide by	**2,5**	
	TOTAL:	**10**	

NOTE: NO marks should be allocated for any part of the drawing in the incorrect position but marks should be allocated for hatching of that component.

Marks should be allocated for neatness, correct title and scale if the drawing is completely incorrect. **[20]**

Copyright reserved

QUESTION 3: STEEL WINDOW

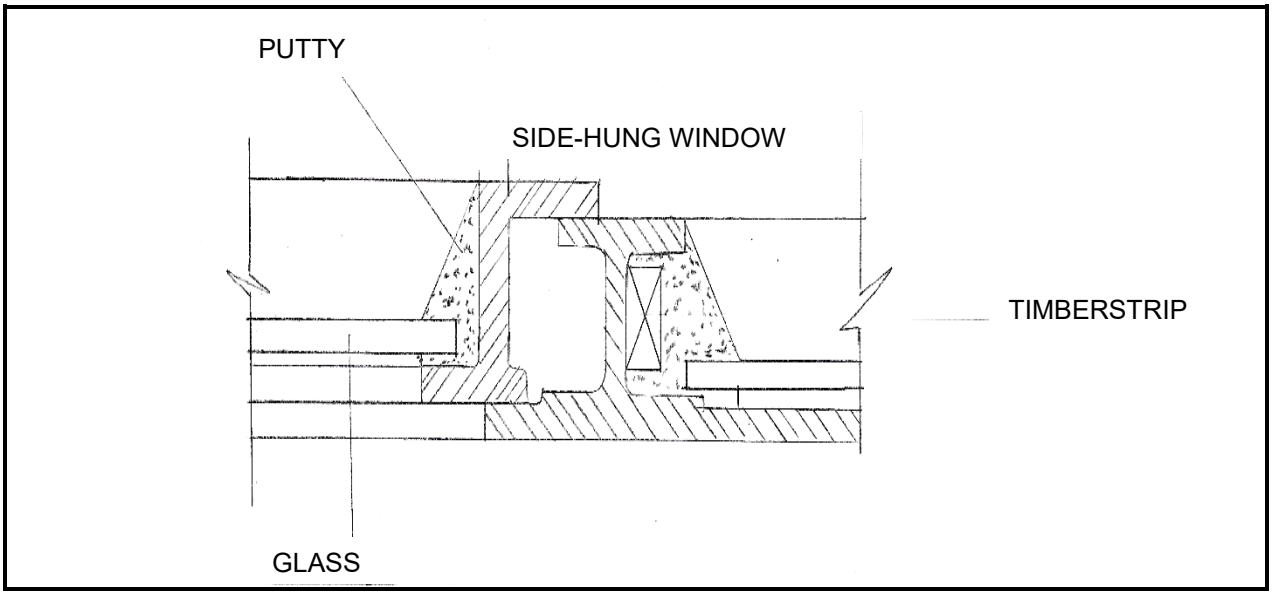

HORIZONTAL SECTION THROUGH A STEEL WINDOW
SCALE 1 : 2

SEE DRAWINGS FOR MODEL ANSWER.

Copyright reserved

RUBRIC FOR DRAWING QUESTION 3			
PART OF THE DRAWING	**MARKING CRITERIA**	**POSSIBLE MARK**	**REMARKS**
Steel-casement window	Correct position	1	
	Correct shape	1	
	Labelling	1	
Side-hung window	Correct position	1	
	Correct shape	1	
	Labelling	1	
Timber strip	Correct position	1	
	Correct shape	1	
	Labelling	1	
Putty	Correct position	1	
	Hatching	1	
	Labelling	1	
Glass	Correct position	1	
	Correct shape	1	
	Labelling	1	
	Labelling	1	
	Line work	**5**	
	Accuracy	**5**	
	Neatness	**3**	
	Title	**1**	
	Scale	**1**	
	Subtotal	**31**	
	Divide by	**3,1**	
	TOTAL:	**10**	

NOTE: NO marks should be allocated for any part of the drawing in the incorrect position but marks should be allocated for hatching of that component.

Marks should be allocated for neatness, correct title and scale if the drawing is completely incorrect. **[10]**

Copyright reserved

QUESTION 4: ARCH WORK

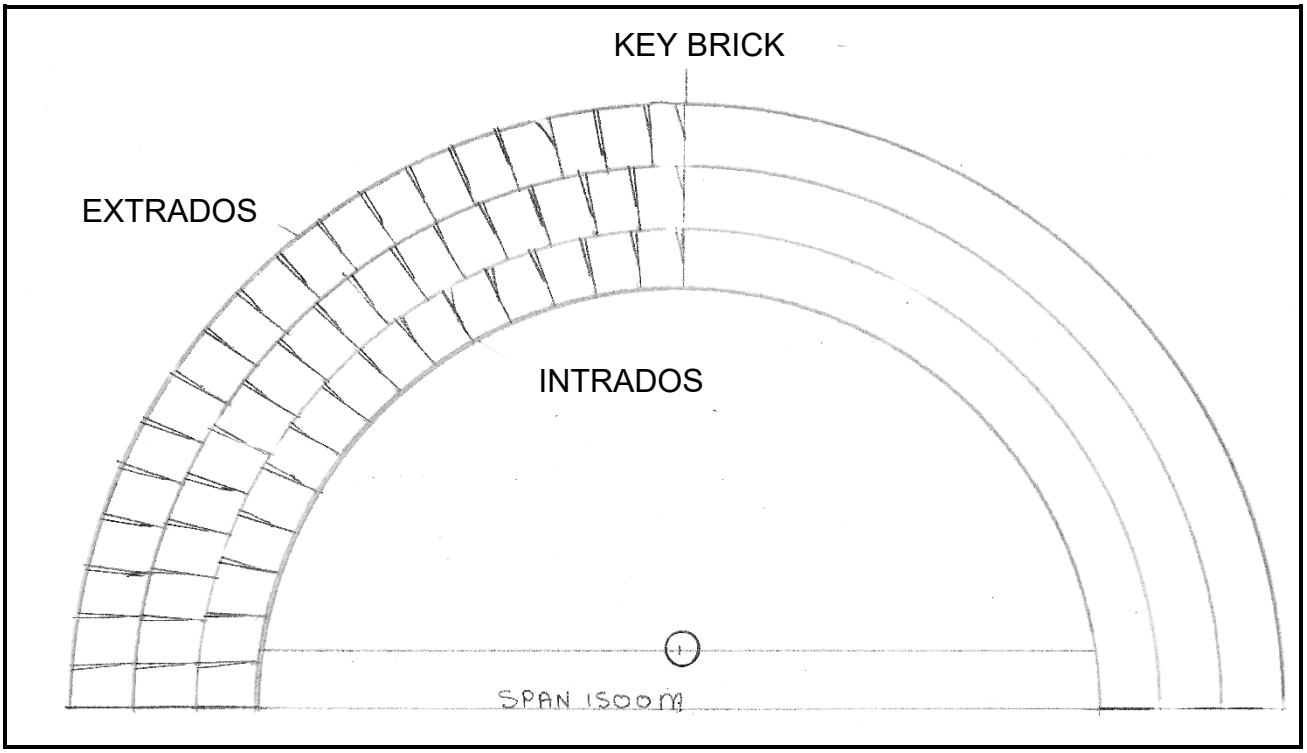

FRONT ELEVATION OF ROUGH SEMICIRCULAR ARCH
SCALE 1 : 10

SEE DRAWINGS FOR MODEL ANSWER.

Copyright reserved

RUBRIC FOR DRAWING QUESTION 4			
PART OF THE DRAWING	**MARKING CRITERIA**	**POSSIBLE MARK**	**REMARKS**
Span	Correct position	3	
	Dimension	1	
	Labelling	3	
Key brick, voussoirs	Correct position	3	
	Labelling	3	
Intrados, extrados	Correct position	2	
	Labelling	2	
	Line work	**4**	
	Accuracy	**4**	
	Neatness	**3**	
	Title	**1**	
	Scale	**1**	
	Subtotal	**30**	
	Divide by	**3**	
	TOTAL:	**10**	

NOTE: NO marks should be allocated for any part of the drawing in the incorrect position but marks should be allocated for hatching of that component.

Marks should be allocated for neatness, correct title and scale if the drawing is completely incorrect. **[10]**

Copyright reserved

QUESTION 5: ROOF AND ROOF COVERINGS

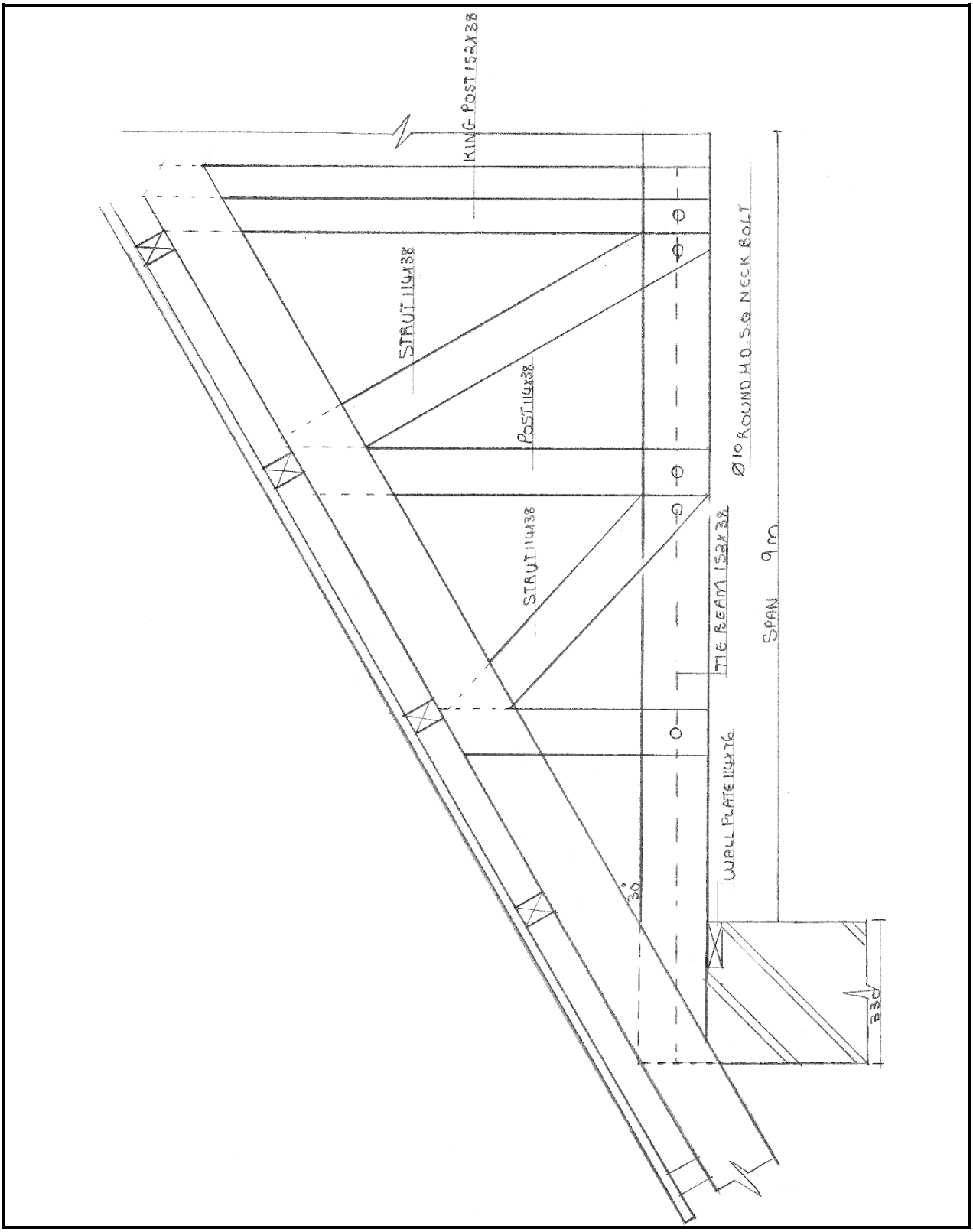

STRUTTED TRUSS
SCALE 1 : 10

SEE DRAWINGS FOR MODEL ANSWER.

Copyright reserved

RUBRIC FOR DRAWING QUESTION 5			
PART OF THE DRAWING	**MARKING CRITERIA**	**POSSIBLE MARK**	**REMARKS**
Wall	Correct position	1	
	Hatching	1	
Rafter, tie beam, wall plate, purlin	Correct position	5	Purlin and rafter end
	Correct shape	2	Wall plate and purlin
	Hatching	2	
King post, strut, queen post	Correct position	2	
	Correct size	2	
Span	Correct size	1	
	Line work	**5**	
	Accuracy	**5**	
	Neatness	**3**	
	Title	**1**	
	Scale	**1**	
	Subtotal	**31**	
	Divide by	**1,55**	
	TOTAL:	**20**	

NOTE: NO marks should be allocated for any part of the drawing in the incorrect position but marks should be allocated for hatching of that component.

Marks should be allocated for neatness, correct title and scale if the drawing is completely incorrect. **[20]**

Copyright reserved

QUESTION 6: GUTTERING

6.1

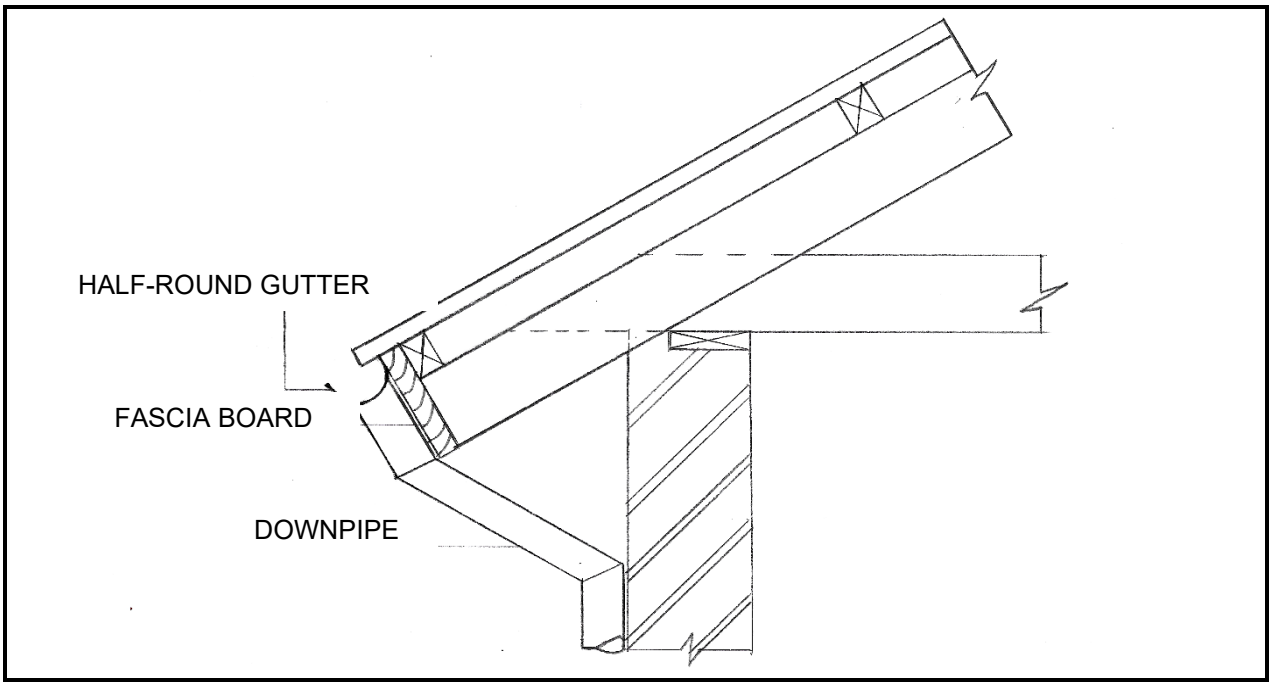

HALF-ROUND GUTTER (5)

SEE DRAWINGS FOR MODEL ANSWER.

RUBRIC FOR DRAWING QUESTION 6.1			
PART OF THE DRAWING	**MARKING CRITERIA**	**POSSIBLE MARK**	**REMARKS**
Half-round gutter	Correct position	2	
	Hatching	1	
Fascia board	Correct position	1	
	Correct shape	1	
Downpipe	Hatching	1	
	Line work	**2**	
	Accuracy	**2**	
	Neatness	**1**	
	Title	**1**	
	Subtotal	**12**	
	Divide by	**2,4**	
	TOTAL:	**5**	

NOTE: NO marks should be allocated for any part of the drawing in the incorrect position but marks should be allocated for hatching of that component.

Marks should be allocated for neatness, correct title and scale if the drawing is completely incorrect.

Copyright reserved

6.2

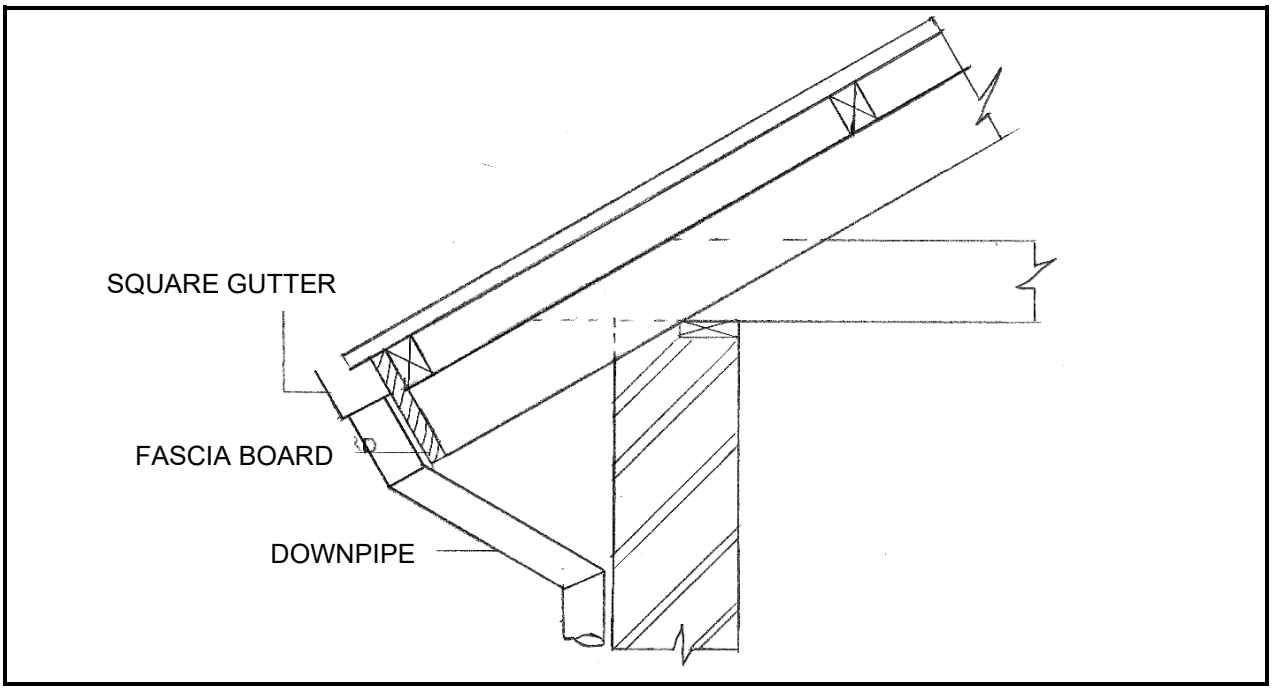

SQUARE GUTTER (5)

SEE DRAWINGS FOR MODEL ANSWER.

RUBRIC FOR DRAWING QUESTION 6.2			
PART OF THE DRAWING	**MARKING CRITERIA**	**POSSIBLE MARK**	**REMARKS**
Square gutter	Correct position	2	
	Hatching	1	
Fascia board	Correct position	1	
	Correct shape	1	
Downpipe	Hatching	1	
	Line work	**2**	
	Accuracy	**2**	
	Neatness	**1**	
	Title	**1**	
	Subtotal	**12**	
	Divide by	**2,4**	
	TOTAL:	**5**	

NOTE: NO marks should be allocated for any part of the drawing in the incorrect position but marks should be allocated for hatching of that component.

Marks should be allocated for neatness, correct title and scale if the drawing is completely incorrect. **[10]**

QUESTION 7: STRUCTURAL STEEL WORK

7.1 and 7.2

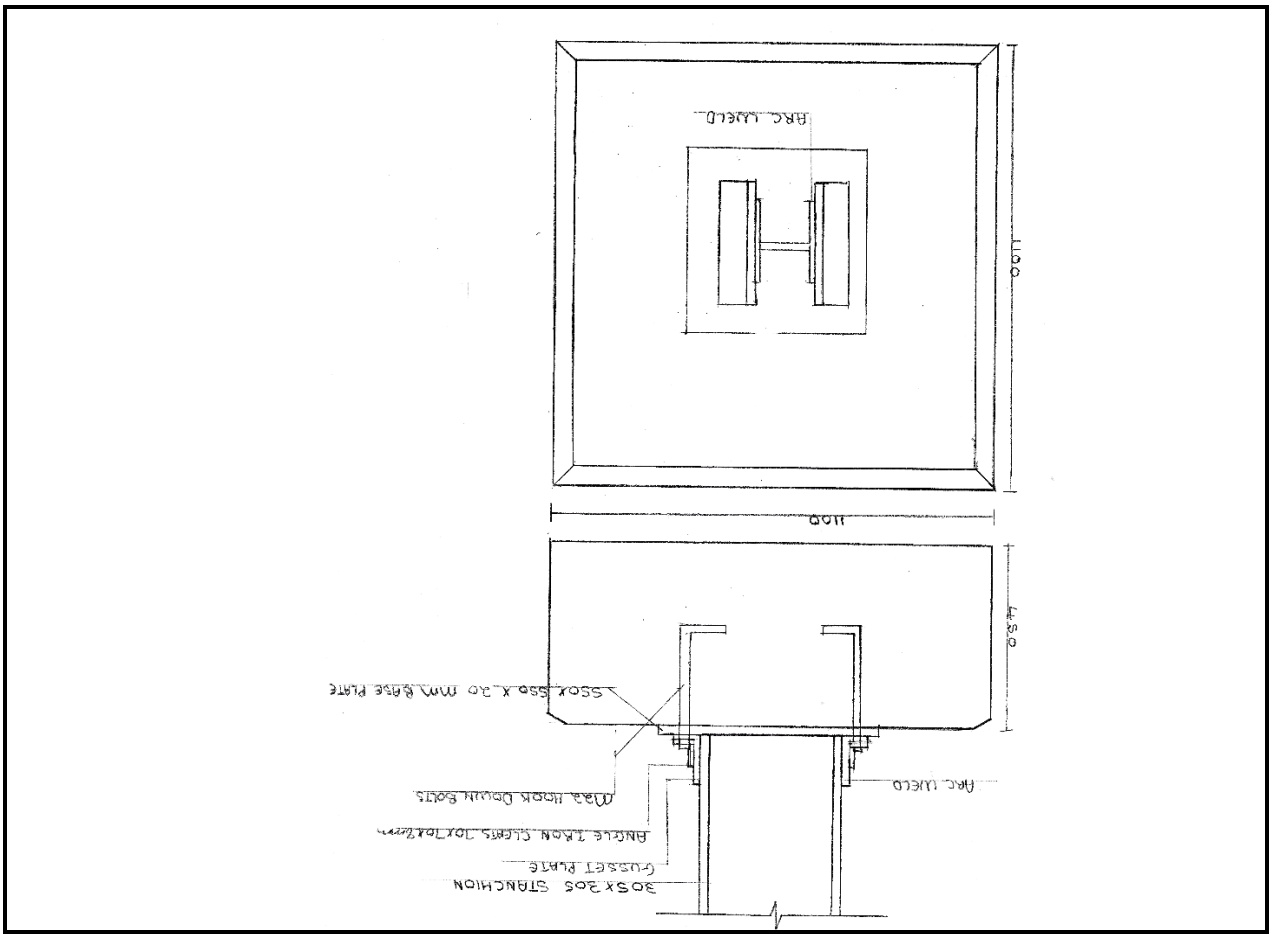

A VERTICAL SECTION THROUGH TWO HOLD-DOWN BOLTS
SCALE 1 : 10

SEE DRAWINGS FOR MODEL ANSWER.

RUBRIC FOR DRAWING QUESTION 7.1 AND 7.2			
PART OF THE DRAWING	**MARKING CRITERIA**	**POSSIBLE MARK**	**REMARKS**
Stanchion	Correct position	5	
	Dimension	5	
	Labelling	2	
Gusset plate and base plate	Correct position	2	
	Labelling	2	
Angle iron cleats, M22 hold-down bolts, arc welded	Correct position	3	
	Labelling	3	
	Line work	**4**	
	Accuracy	**4**	
	Neatness	**3**	
	Title	**1**	
	Scale	**1**	
	Subtotal	**35**	
	Divide by	**1,75**	
	TOTAL:	**20**	

NOTE: NO marks should be allocated for any part of the drawing in the incorrect position but marks should be allocated for hatching of that component.

Marks should be allocated for neatness, correct title and scale if the drawing is completely incorrect. **[20]**

TOTAL: 100

Copyright reserved