higher education & training

Department:
Higher Education and Training
REPUBLIC OF SOUTH AFRICA

MARKING GUIDELINE

NATIONAL CERTIFICATE

BUILDING AND STRUCTURAL CONSTRUCTION N4

14 April 2020

This marking guideline consists of 9 pages.

Copyright reserved

QUESTION 1

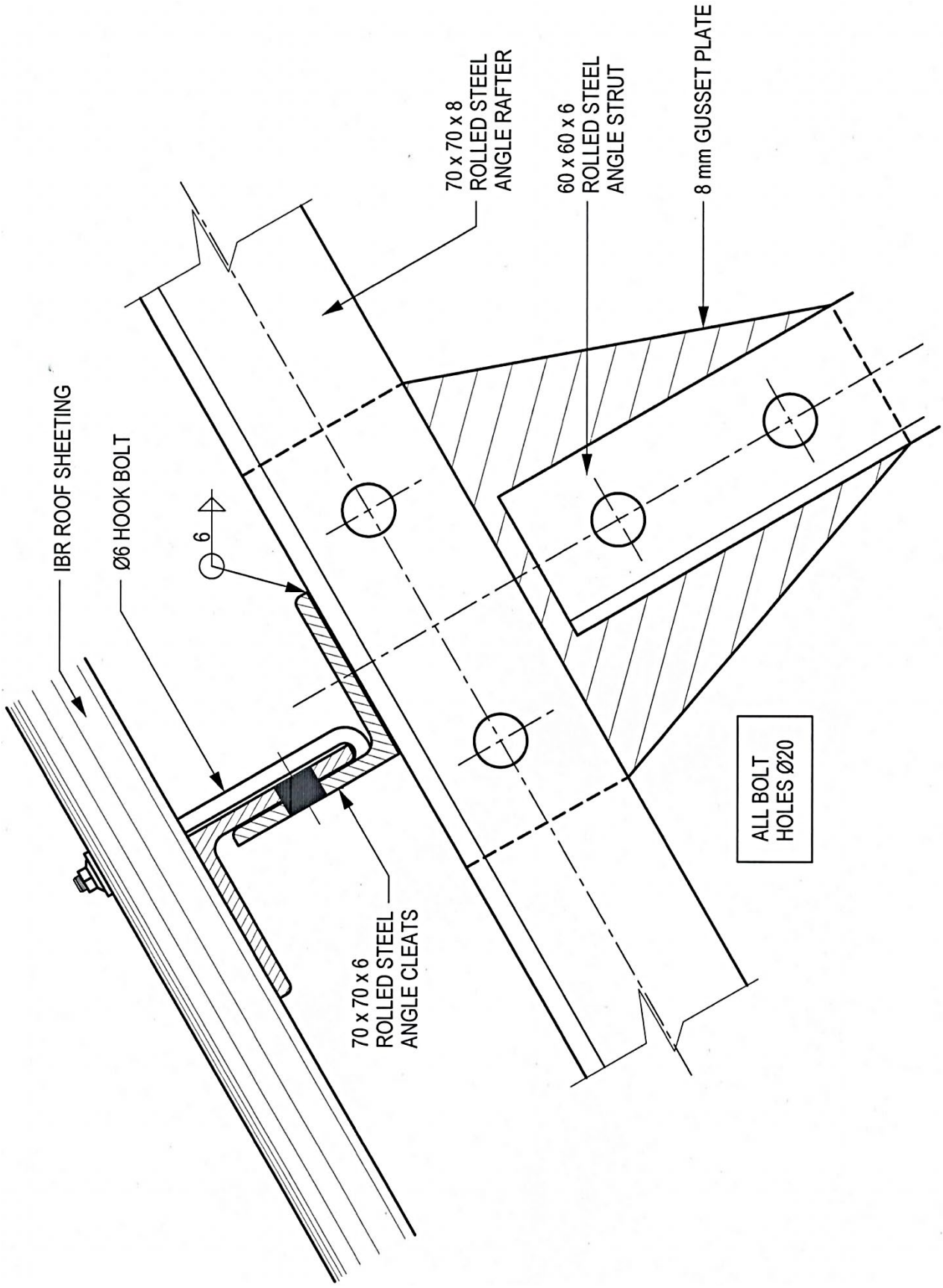

[17]

QUESTION 2

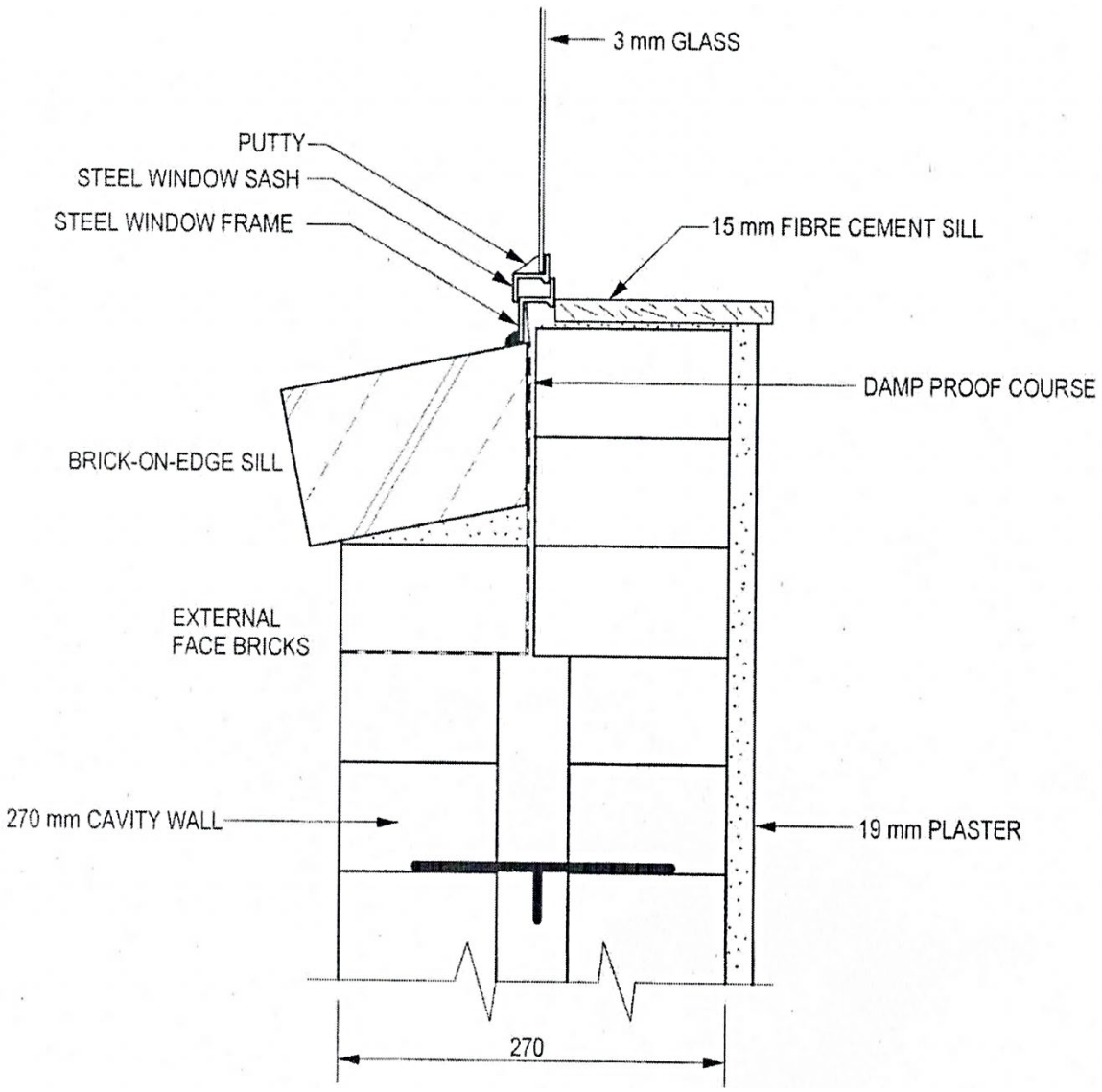

VERTICAL SECTION THROUGH A STEEL CASEMENT WINDOW BUILT INTO A CAVITY WALL
SCALE 1:5

[15]

QUESTION 3

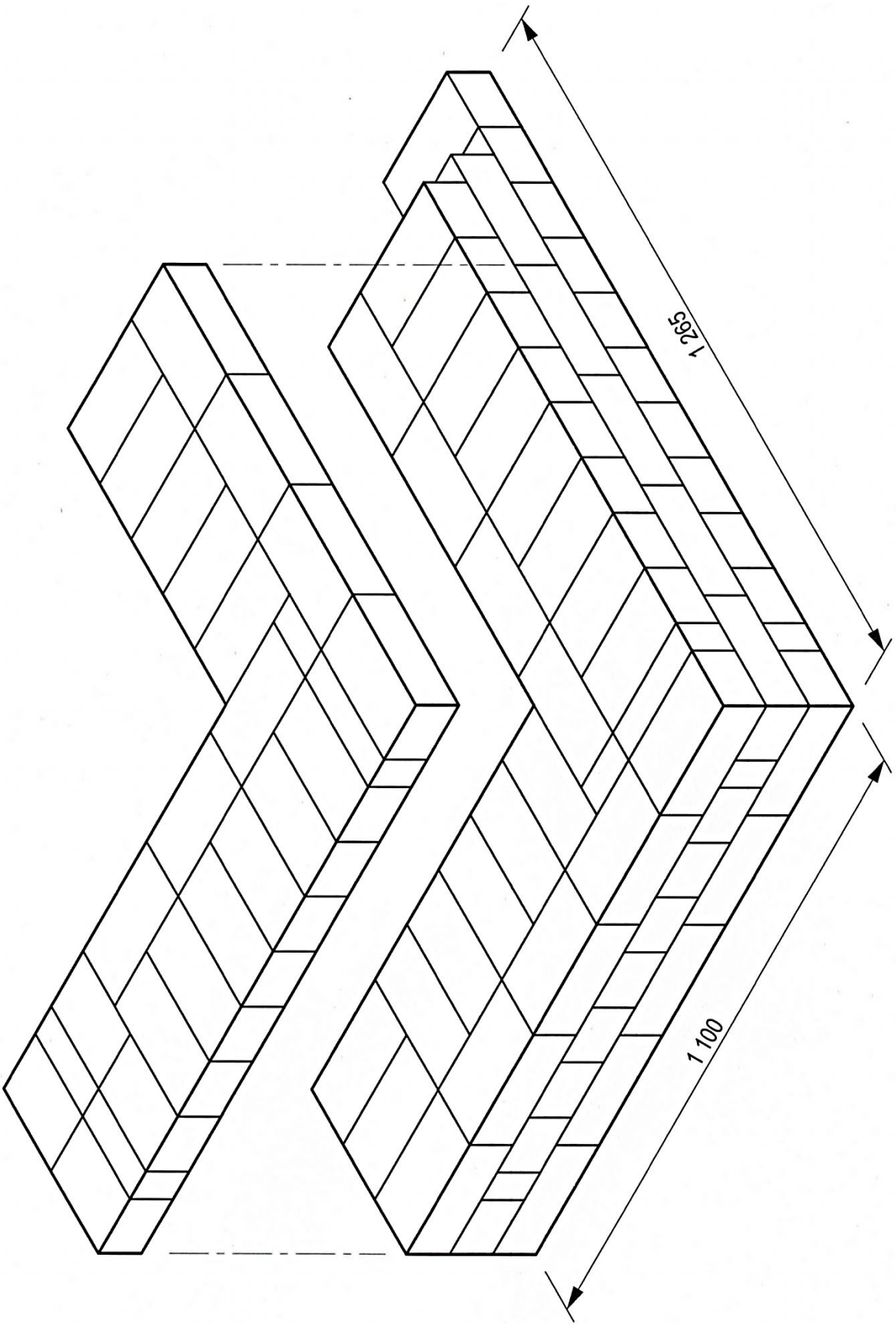

[15]

QUESTION 4

4.1
- Cement
- Fine aggregate (sand)
- Coarse aggregate (stone)
- Potable water (4)

4.2
- Fibreboard (wood fibreboard, insulation board)
- Gypsum board (plaster board)
- Fibre-cement board (3)

4.3
- Snap-head or cup head rivet
- Conical head rivet
- Pan-head rivet
- Flat-head or countersunk head rivet (Any 2 × 1) (2)

[9]

QUESTION 5

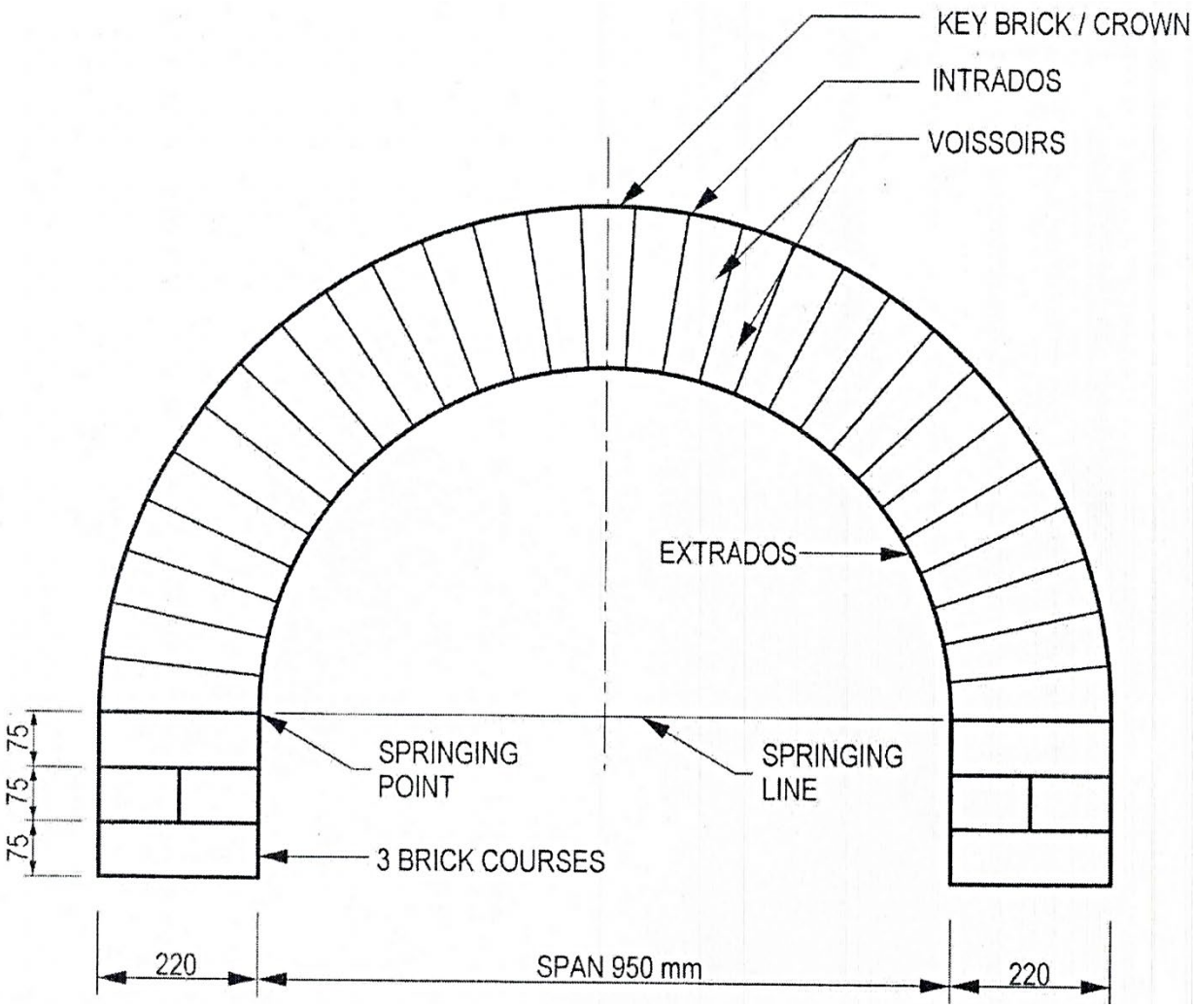

SEMICIRCULAR FACE-BRICK ARCH
SCALE 1:10

[12]

QUESTION 6

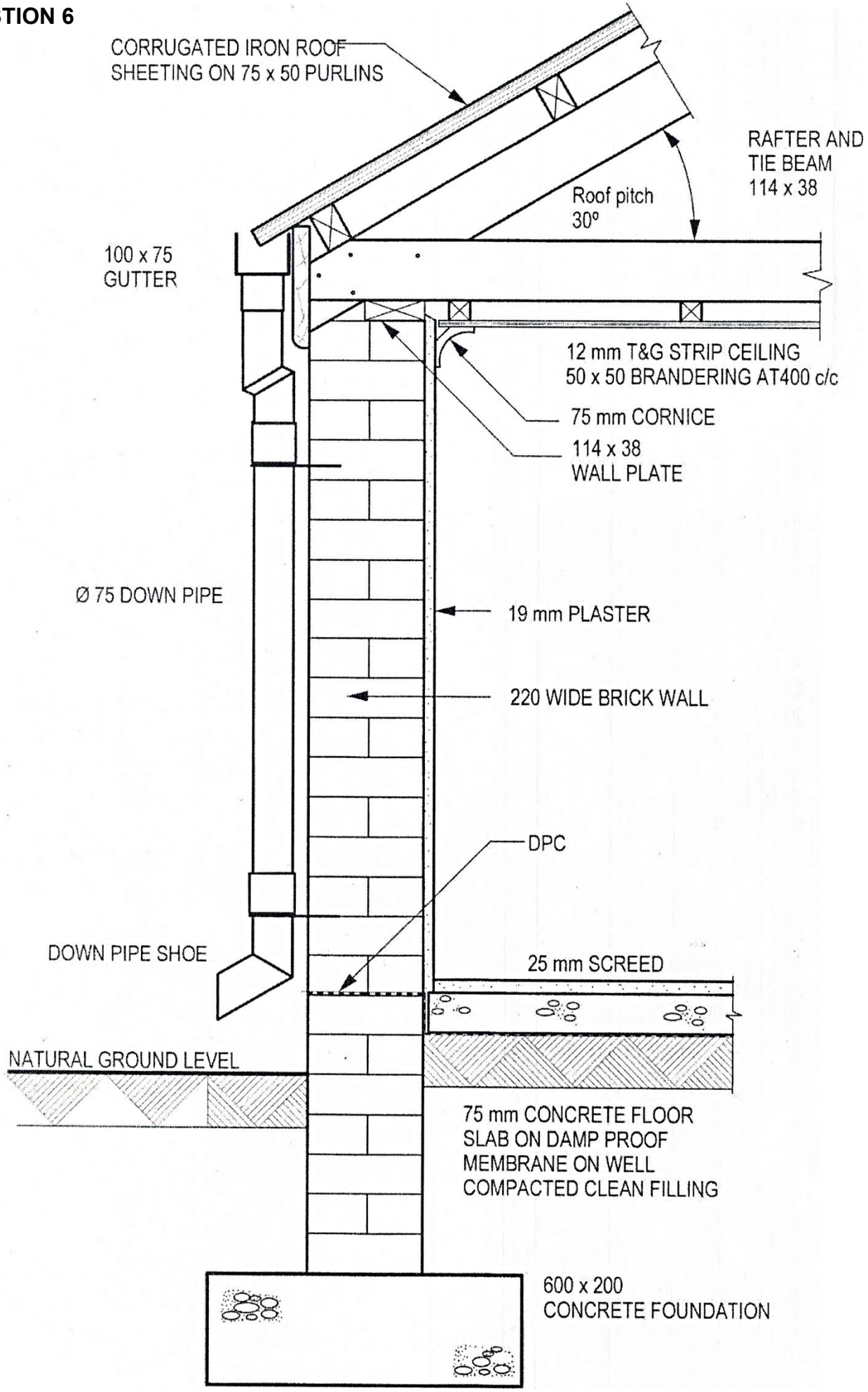

VERTICAL SECTION THROUGH THE EAVES OF A HOUSE
SCALE 1:10

[22]

QUESTION 7

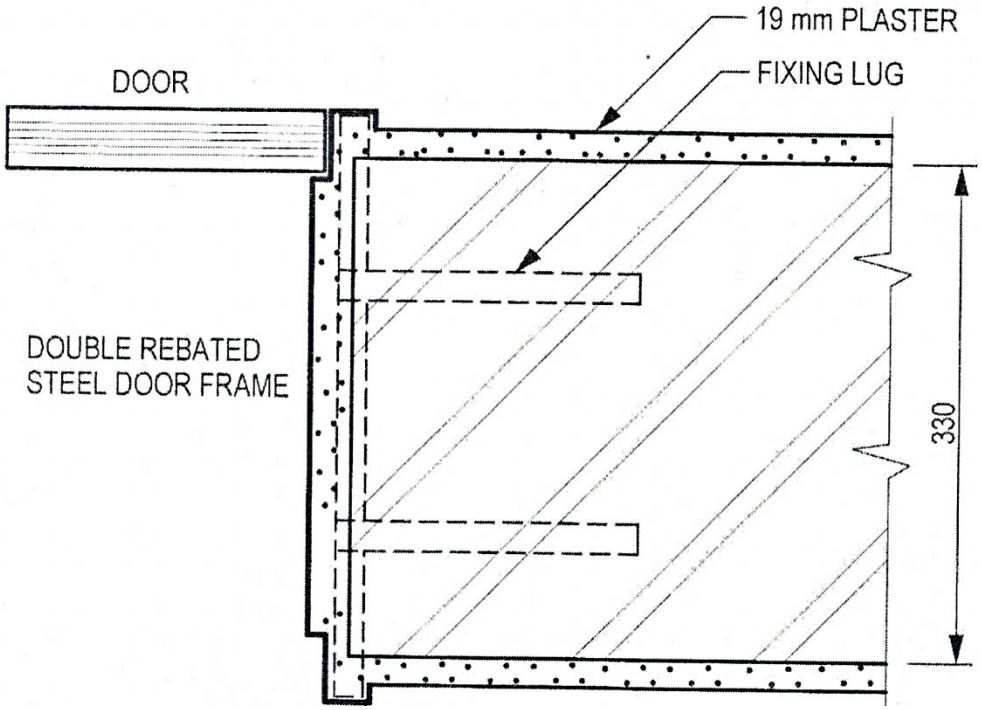

HORIZONTAL SECTION THROUGH A 330 MM WIDE WALL WITH A STEEL DOORFRAME
SCALE 1:5

[10]

MARK SHEET

QUESTION 1		
MARK ALLOCATION		
Correctness:		10
Set-out lines corr.	1	
Rafter	1	
Strut	1	
Gusset Plate corr.	1	
Steel cleat	1	
Purlin	1	
Roof covering	1	
Roof bolt	1	
Rivet lay-out corr.	2	

Accuracy	3
Cente lines	1
Labels	2
Hatching	1

TOTAL
10 + 7
= 17 Marks

QUESTION 2		
MARK ALLOCATION		
Correctness:		10
Brick wall width corr.	1	
Window sections corr.	3	
Glass & putty	2	
Window sills	2	
DPC	1	
Tie wire	1	
Accuracy		2
Plaster		1
Labels		2
Total		15

QUESTION 3	
MARK ALLOCATION	
Lengths corr	2
Wall width corr	1
3 courses high	2
Projected course	1
Corr bonding	3
Raking back	2
Stopped end	2
Accuracy	2
Total	15

QUESTION 4
REFER TO MARKING GUIDELINE
TOTAL = 9

QUESTION 5	
MARK ALLOCATION	
Span corr	1
220 mm deep corr	1
Bricks corr.	2
3 Courses below	2
Accuracy	2
Labels	2
Dimensions	2
Total	12

QUESTION 6		
MARK ALLOCATION		
CORRECTNESS:		15
Conc Fndt	1	
Wall corr	1	
Floor Construc.	2	
Roof Construc.	3	
Ceiling Construc.	3	
Gutter& Down pipe.	2	
Plaster & Screed	2	
Ground Level	1	
Accuracy		3
Hatching		1
Labels		3
Total		22

QUESTION 7		
MARK ALLOCATION		
Correctness:		6
Wall width corr	1	
Steel frame corr	3	
Door in Place	1	
Fixing lug	1	
Accuracy		2
Dimension		1
Labels		1
Total		10

TOTAL: 100

Copyright reserved