higher education & training

Department:
Higher Education and Training
REPUBLIC OF SOUTH AFRICA

MARKING GUIDELINE

NATIONAL CERTIFICATE

APRIL EXAMINATION

BUILDING AND STRUCTURAL CONSTRUCTION N4

8 APRIL 2016

This marking guideline consists of 9 pages.

Copyright reserved

QUESTION 1.1

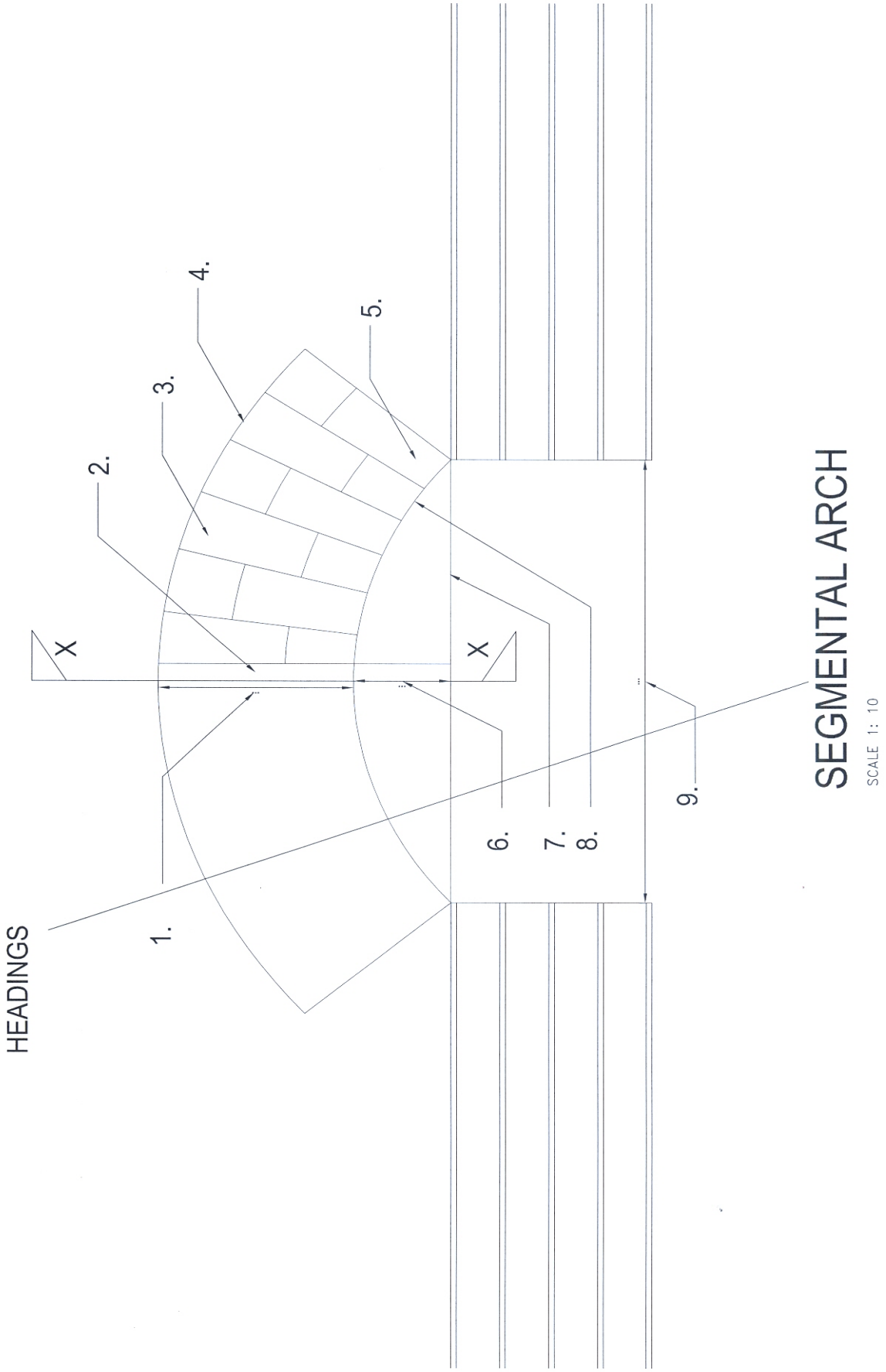

(15)

1.2 Centres (temporary work-support structures) are temporary wooden structures which are constructed to support brick, concrete or stone arches during their construction. They are removed once the brickwork is complete and set sufficiently to support itself. Centres may be constructed for flat, elliptical, semi-elliptical, segmental, circular or semi-circular arch shapes. The construction of the centres depends a great deal upon the mass of the arch work to be supported, and also upon the wall thickness and span of the arch. The intrados' size and shape become the outer size and shape of the centering. The construction of the centering may be of solid type for the smaller arches and built-up type for the larger arches. (5)

[20]

QUESTION 2.1

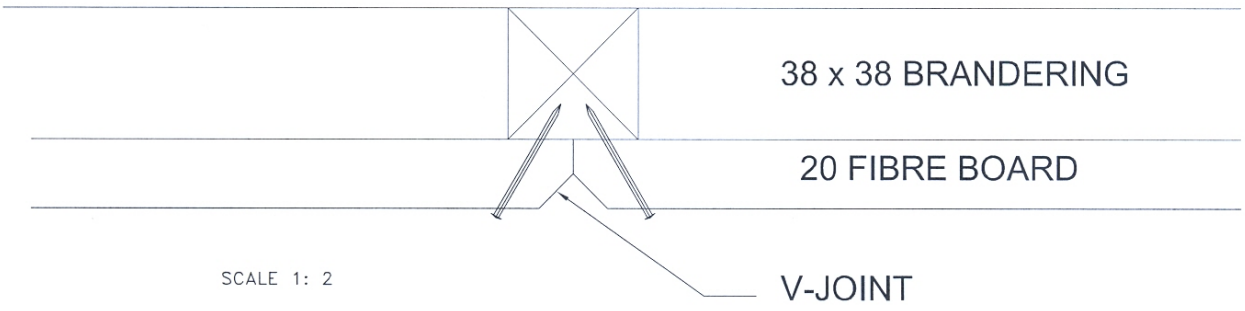

(4)

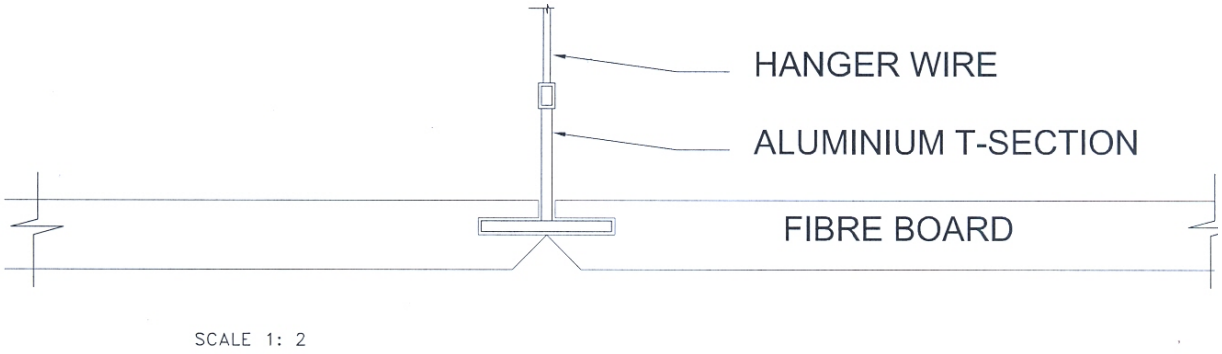

(4)

QUESTION 2.2

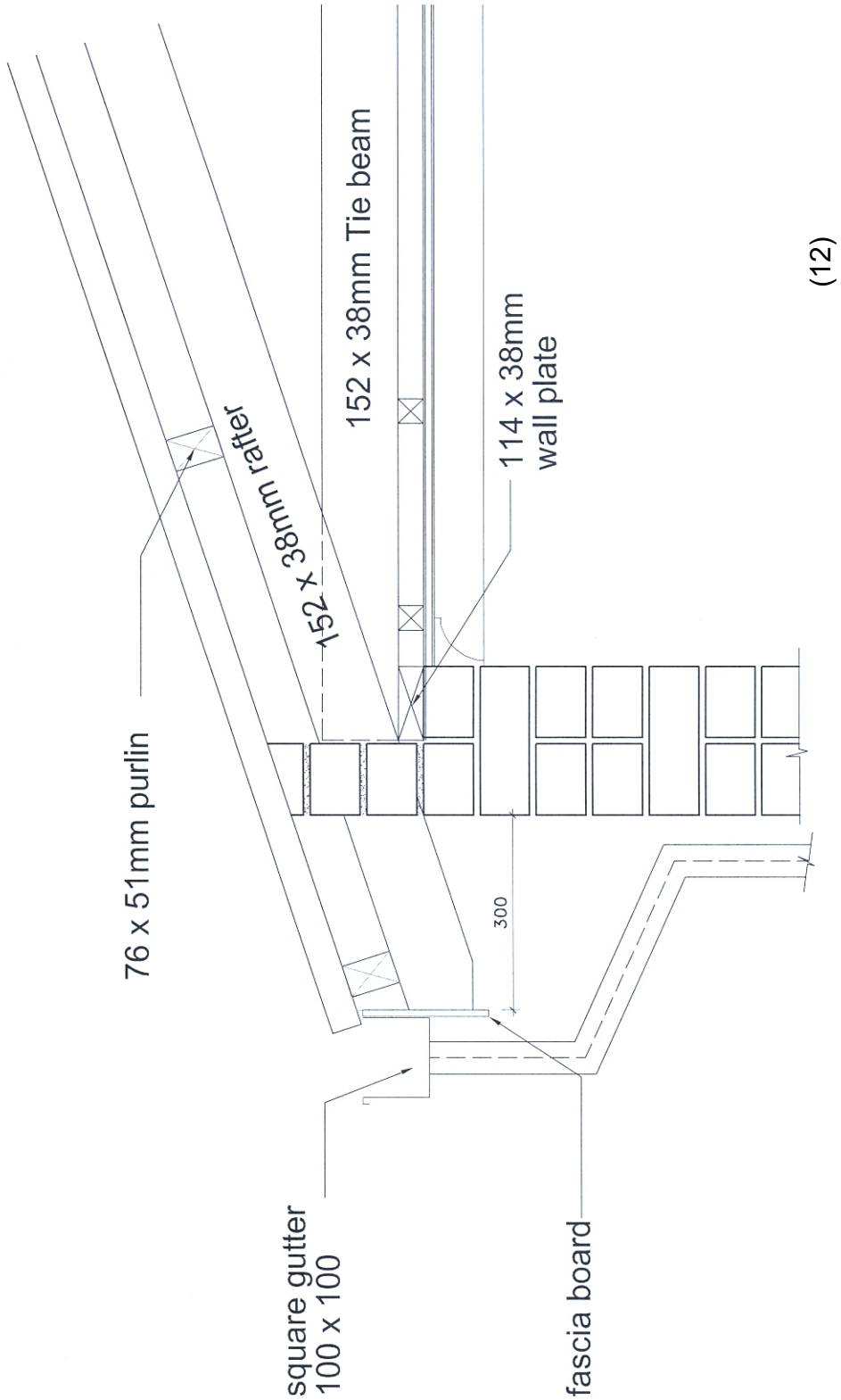

(12)

[20]

QUESTION 3

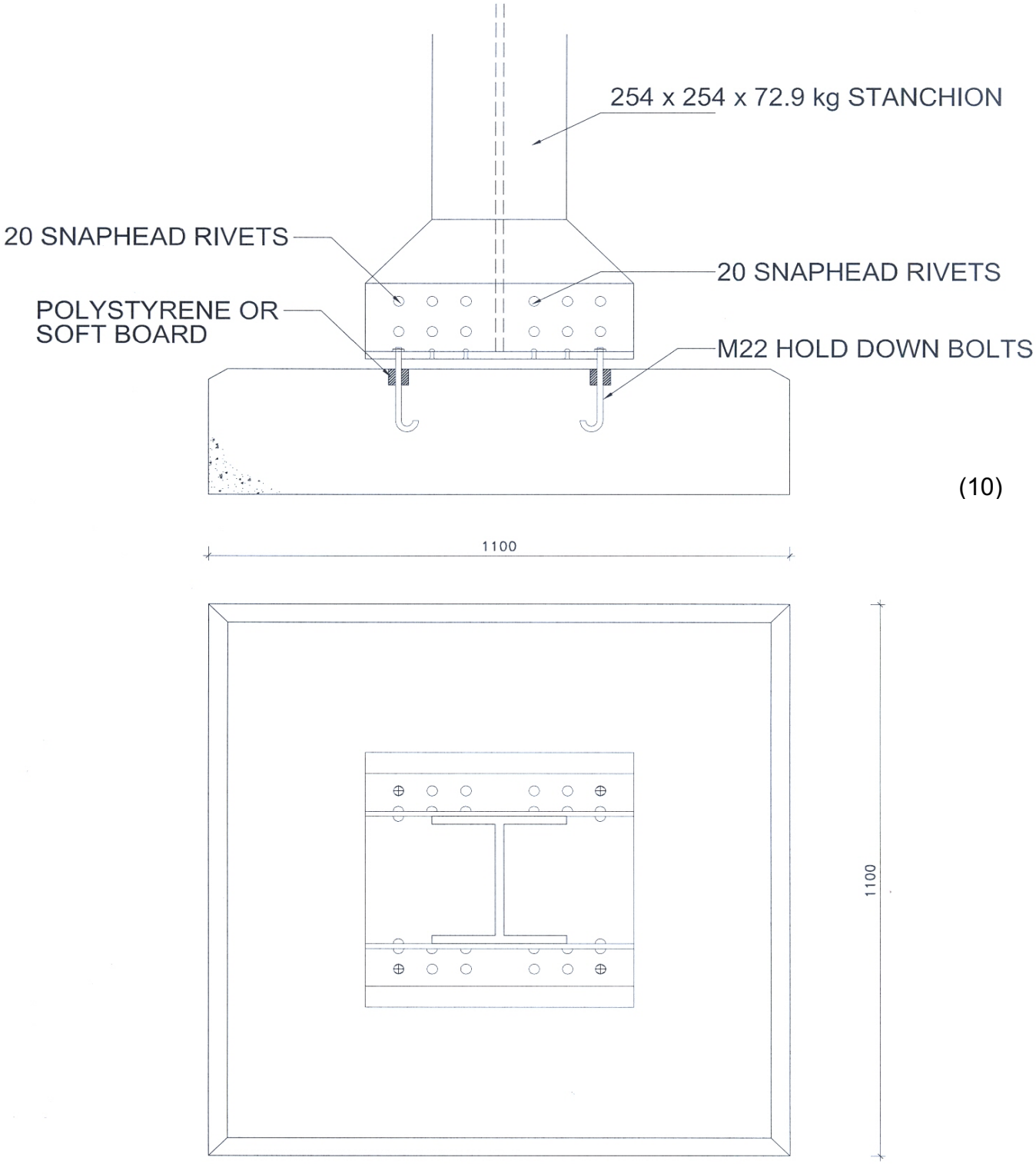

(10)

(10)
[20]

QUESTION 4

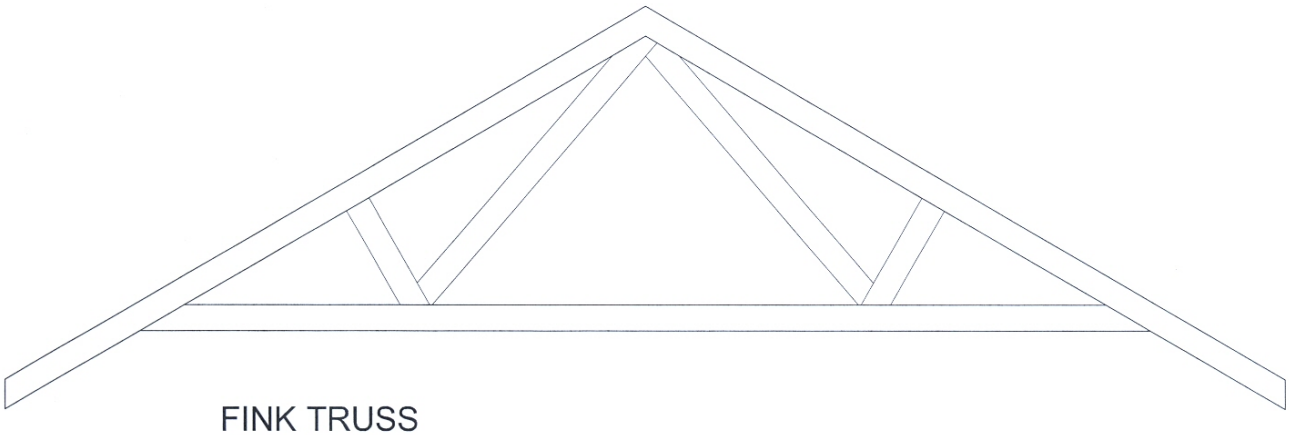

FINK TRUSS

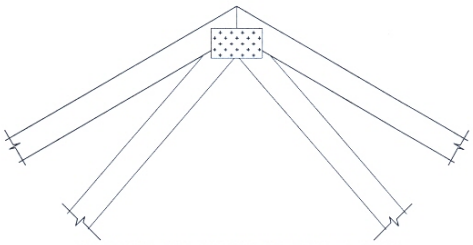

CONNECTOR PLATE

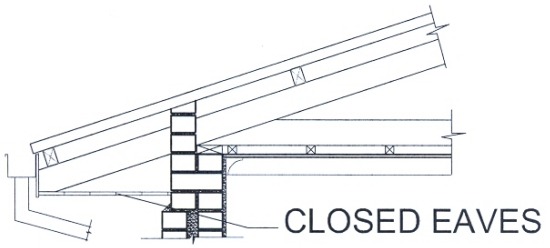

CLOSED EAVES

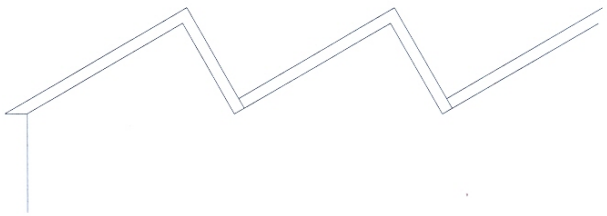

SAW-TOOTH ROOF TRUSS



APRON FLASHING

UNDER FLSHING

(5 x 3) **[15]**

QUESTION 5.1

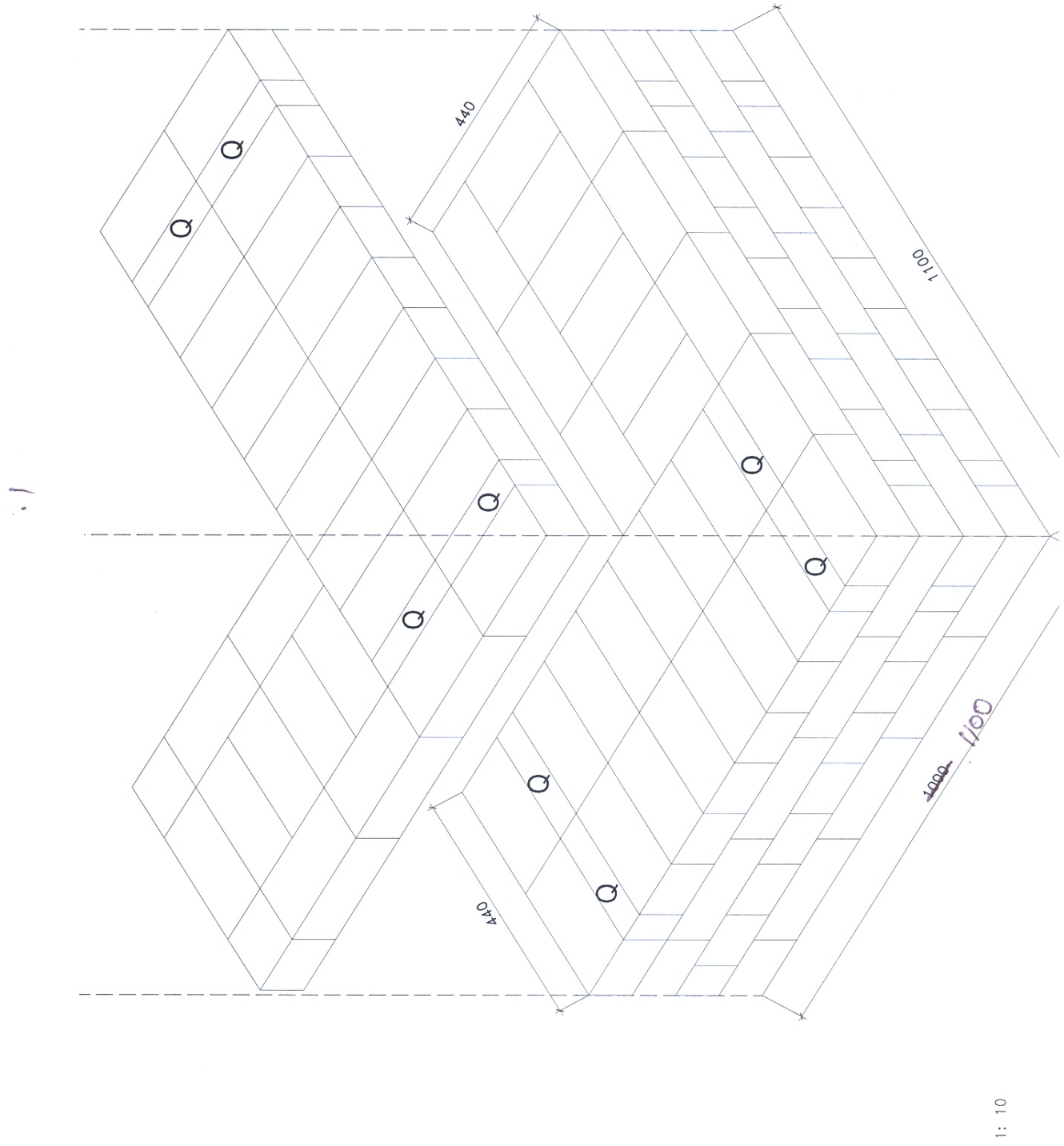

(10)

5.2
- It serves as a levelled base for walling.
- It provides a wider area over which the weight of the wall and its supporting parts can be spread.
- Overturning in soft soil is prevented.
- A linked frame is provided for the building to rest on.
- An indirect support for the floors is provided. (5 x 1) (5)

[15]

QUESTION 6

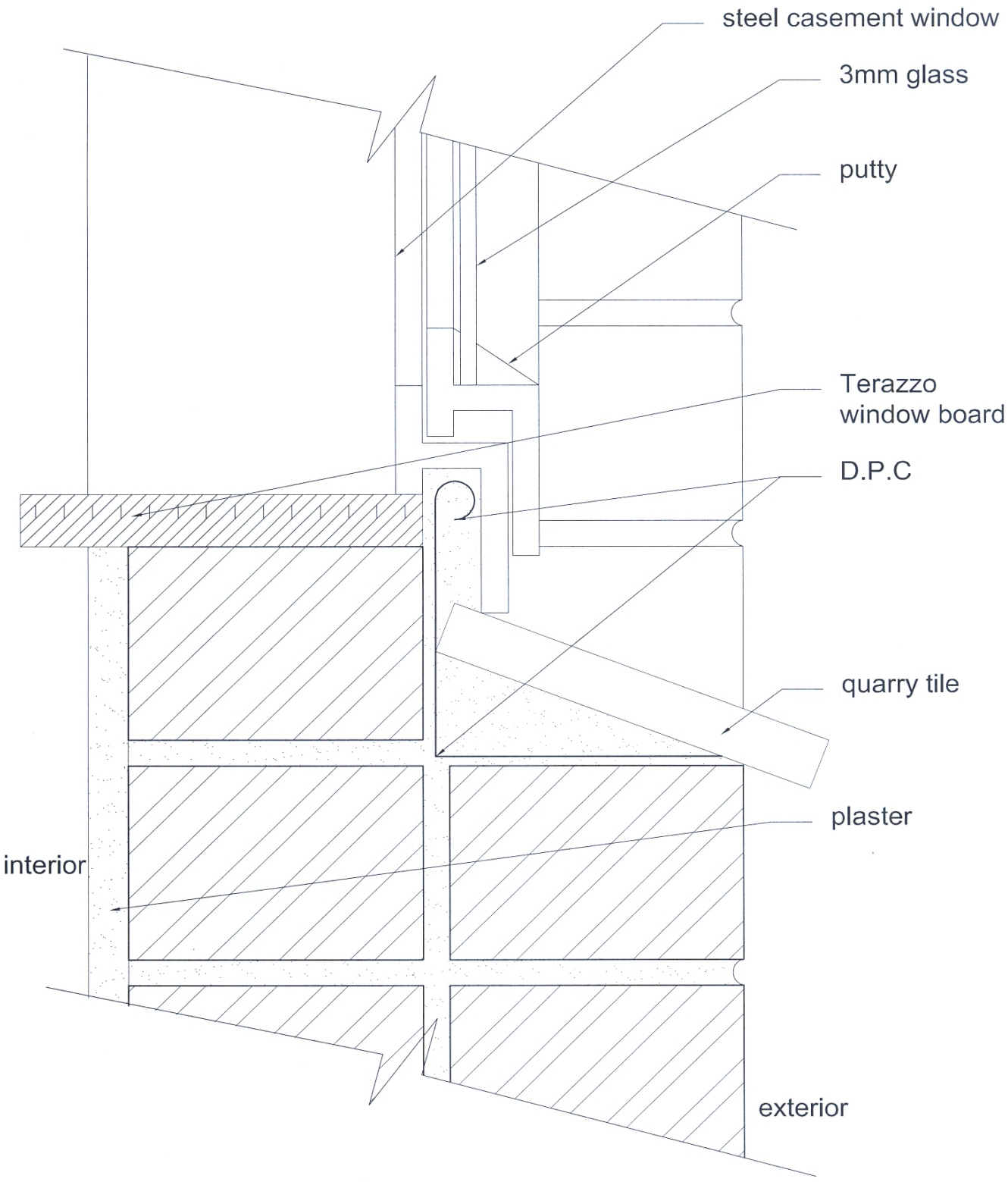

SECTION THROUGH CASEMENT WINDOW.
SCALE 1: 2

[10]

TOTAL: 100

Copyright reserved