higher education & training

Department:
Higher Education and Training
REPUBLIC OF SOUTH AFRICA

MARKING GUIDELINE

NATIONAL CERTIFICATE

NOVEMBER EXAMINATION

BUILDING AND CIVIL TECHNOLOGY N3

23 NOVEMBER 2016

This marking guideline consists of 6 pages.

Copyright reserved

QUESTION 1

1.1
1.1.1 Excavations
1.1.2 Poling boards
1.1.3 Walings
1.1.4 Struts
1.1.5 Wedges
1.1.6 Close-boarded
1.1.7 Soft
1.1.8 Strutting

(8 x 1) (8)

1.2
- Make recommendations for any matter which affects the health and safety of persons at the workplace or the section which has been established by the employer, and if these recommendations fail to be resolved the matter is referred to an inspector.
- Discuss any incident at the workplace.
- Report on an incident during which a person was injured, became ill or died.
- Shall perform such other functions as may be prescribed.
- Shall keep record of each recommendation made to an employer.

(Any prescribed 4 x 1) (4)

1.3
- Unfair discrimination against an employee.
- Unfair suspension of an employee or any other disciplinary action short of dismissal.
- The failure or refusal of an employer to reinstate or re-employ a former employee in terms of any agreement.
- Unfair conduct on the part of the employer relating to the promotion, demotion or training of an employee or relating to the provision of benefits to an employee.
- The employee's pregnancy, intended pregnancy, or any reason related to her pregnancy.
- To compel the employee to accept a demand in respect of any matter of mutual interest between employer and employee.

(4 x 1) (4)
[16]

QUESTION 2

2.1
- Horizontal foundation excavation checks
- Spirit level and straight edge
- Dumpy level and staff
- Pipe level (U-tube)
- Stepped foundation levels (Any 4 x 1) (4)

2.2

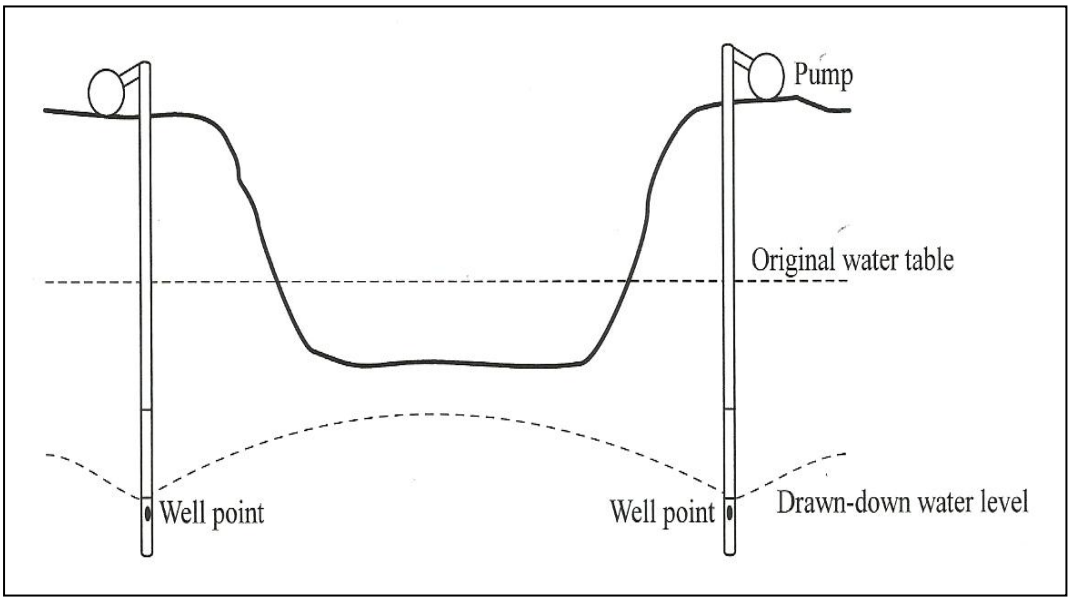

(1 mark for each correct label) (4)

2.3
- Mass concrete strip foundation
- Reinforced steel strip foundation
- Float or raft foundations
- Isolated or pad foundations
- Combined column foundations
- Cantilever column foundations
- Ground beams with column foundations
- Pile foundations (Any 4 x 1) (4)

2.4
- The ground may settle in after the structure was constructed and cannot withstand the load known as cohesive settlement.
- The action sub-soil water has due to seepage and the high water table in the area.
- Tree roots may have endangered the foundations by lifting or cracking it.
- There might be uneven loading on the foundations; may be wrong design.
- The level of the adjacent ground has to be lowered to, for example, construct a new basement.
- The load-bearing capacity of the foundation has to be increased for building an additional story.

(4 x 1) (4)
[16]

QUESTION 3

3.1 3.1.1 Flushing valve
3.1.2 Dished gulley
3.1.3 Rodding eye
3.1.4 Grease trap

(4 x 1) (4)

3.2 1: Main beam
2: Secondary beam
3: Shop connections
4: Site connections
5: Web cleats to both sides (5 x 1) (5)

3.3
- Knots warp the thread and decrease the strength.
- They are harder than the surrounding wood and cause saw blades to stick.
- Knots can crack or become loose from the surrounding wood.
- Knots cause a wastage of wood when they have to be cut out. (4 x 1) (4)

3.4
- A neat appearance is obtained.
- It is possible to keep the face of the brickwork cleaner.
- It is possible to maintain the colour, texture and density of the surface finish.
- It gives the required decorative finish to the surface and also harder to protect the brickwork.

(3 x 1) (3)
[16]

QUESTION 4

4.1 4.1.1 Electricity is supplied from a main source such as a power station by means of overhead cables or underground cables, to substations in towns or cities.

4.1.2 It is a central point or board from which electricity is distributed to circuits or to other distribution boards in a house or other building.

4.1.3 It is a fitting on the inside walls of a building to supply electricity.

4.1.4 It is a group of electrical panels assembled into a single unit that is installed in a cabinet accessible from the front only.

4.1.5 An earth-leakage relay is a device used to directly detect currents leaking to earth from an installation and cut the power off to prevent fire or electrical shocks.

(5 x 2) (10)

4.2 4.2.1 Strength grade visual

4.2.2 Strength grade mechanical

(2 x 1) (2)

4.3 1: Earth
2: Neutral bar
3: Circuit-breaker
4: Lightning arrester (4 x 1) (4)
[16]

QUESTION 5

5.1

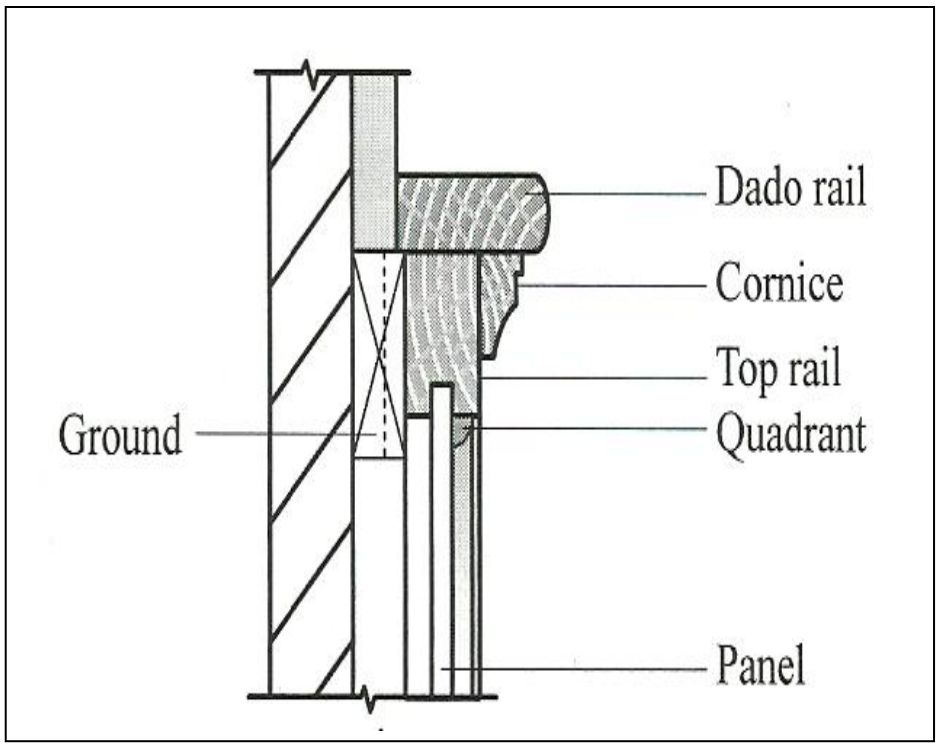

(2 marks for correct drawing, 6 marks for labelling) (8)

5.2
- Ensure the surface is clean, stable and free of dust.
- Apply one coat of varnish and allow it to dry.
- Take care that you avoid making heavy brush marks.
- Once the surface is properly dry, give it a light sanding with a fine-grained sandpaper.
- Apply the second coat and allow it to dry.
- After light sanding, apply a third coat.
- Repeat the coats until a satisfactory finish is obtained.
- A coat of varnish must be applied very evenly with a brush and left to dry.

(8 x 1) (8)
[16]

QUESTION 6

6.1 1: Pre-cast concrete kerb
2: Channel
3: Surface course of blocks
4: 50 mm sand-bedding course
5: 75 mm minimum flexible sub-base (5 x 1) (5)

6.2 6.2.1 Area of wall = 25 m x 3✓
= 75 m^2✓

Area of opening = 2 x 2
= 4 m^2✓

Total area of brickwork = 75 – 4
= 71 m^2✓

6.2.2 Number of bricks required = 71 x 100✓
= 7 100✓

6.2.3 Amount of sand required = 7 100 ÷ 1 000✓
= 7,1 tonnes✓ (7 tonnes)✓

6.2.4 Labour cost = R300✓ x 71✓
= R21 300✓

(4 x 3) (12)

6.3
- Surface
- Base course
- Sub-base
- Sub-grade

(Any 3 x 1) (3)
[20]

TOTAL: 100

Copyright reserved