higher education & training

Department:
Higher Education and Training
REPUBLIC OF SOUTH AFRICA

T120**(E)**(A3)T

NATIONAL CERTIFICATE

BUILDING AND CIVIL TECHNOLOGY N3

(11010273)

3 August 2018 (X-Paper)
09:00–12:00

This question paper consists of 5 pages and 1 diagram sheet.

Copyright reserved

DEPARTMENT OF HIGHER EDUCATION AND TRAINING
REPUBLIC OF SOUTH AFRICA

NATIONAL CERTIFICATE
BUILDING AND CIVIL TECHNOLOGY N3
TIME: 3 HOURS
MARKS: 100

INSTRUCTIONS AND INFORMATION

1. Answer ALL the questions.
2. Read ALL the questions carefully.
3. Number the answers according to the numbering system used in this question paper.
4. ALL sketches must be clear, of good proportion and properly labelled.
5. Write neatly and legibly.

Copyright reserved

QUESTION 1

1.1 Indicate whether the following statements are TRUE or FALSE. Choose the answer and write only 'True' or 'False' next to the question number (1.1.1–1.1.7) in the ANSWER BOOK.

1.1.1 The objective of planning is to measure the degree of progress at any time during construction.

1.1.2 Every employee shall take reasonable care for the health and safety of himself or herself and other persons who may be affected by his or her acts or omissions.

1.1.3 A function of the health and safety committee is that it will permit the employer to pay the fine in such instalments as he/she may determine.

1.1.4 The architect must prepare the drawing and calculate the costs which are in line with what the owner is prepared to pay.

1.1.5 The contract manager is a member of the builder's team. His/Her role is crucial to the success of any project.

1.1.6 Dismissal means fair termination of a contract.

1.1.7 Not every employee has the right to participate in forming a trade union.

(7 × 1) (7)

1.2 Explain THREE site functions performed by the clerk of works. (3)

1.3 Name SIX functions that positively influence motivation on site. (6)
[16]

QUESTION 2

2.1 Make a large, neatly labelled sketch to show how a level mark can be transferred from one peg to another by means of a spirit level. (5)

2.2 Name SEVEN parts that are found on the pad or isolated foundation which is used to support the load from columns. (7)

2.3 State FOUR causes of collapse of soil during excavations. (4)
[16]

Copyright reserved

QUESTION 3

3.1 Briefly explain *artificial cement.* (2)

3.2 Name FIVE characteristics of no-fines concrete. (5)

3.3 State FOUR purposes of a cavity wall. (4)

3.4 Differentiate between the following:

3.4.1 Cube testing

3.4.2 Slump testing

(2 × 1) (2)

3.5 Name the THREE types of vibrators in the category of small power plants. (3)

[16]

QUESTION 4

4.1 Explain the term *storm water*. (2)

4.2 Sketch a neat beam-to-column connection (simple, semirigid and rigid). (10)

4.3 Write out in full each of the following abbreviations used in plumbing:

4.3.1 SWD

4.3.2 WB

4.3.3 WP

4.3.4 G

(4 × 1) (4)

[16]

QUESTION 5

5.1 Briefly explain the importance of using the following paint coats:

5.1.1 Prime coat

5.1.2 Undercoat

5.1.3 Finishing coat

(3 × 2) (6)

5.2 Explain the use of each of the following floor coverings:

5.2.1 Granolithic floors (1)

5.2.2 PVC tiles (2)

5.2.3 Thermoplastic tiles (1)

Copyright reserved

5.3 Draw a neat freehand sketch of TWO lights controlled by ONE switch. (4)

5.4 Name the symbols below used for electrical components in a house installation. Write only the answer next to the question number (5.4.1–5.4.2) in the ANSWER BOOK.

5.4.1



5.4.2



(2 × 1) (2)
[16]

QUESTION 6

6.1 Define a *wooden suspension floor.* (2)

6.2 The plan and elevation A–A of a storeroom are shown on the attached DIAGRAM SHEET. The storeroom is to be built in face brick, but the foundation is built to the height of floor level in stock bricks.

Calculate ALL the materials, costs and labour for all the work necessary to complete the foundation up to floor level.

NOTE: The remainder of the soil must be used as filling.

Specifications:

Concrete: 5 MPa at R300,00 per cubic metre

Bricks: Stock bricks at R400,00 per thousand

Labour: R200,00 per square metre

6.2.1 Perimeter of foundation wall, using the centre-line method (2)

6.2.2 Cost of concrete (floor not included) (6)

6.2.3 Cost of bricks up to floor level (4)

6.2.4 Cost of labour (1)

6.3 Paint protects and decorates a wall and makes cleaning easier.

Name FIVE types of paints. (5)
[20]

TOTAL: 100

Copyright reserved

DIAGRAM SHEET

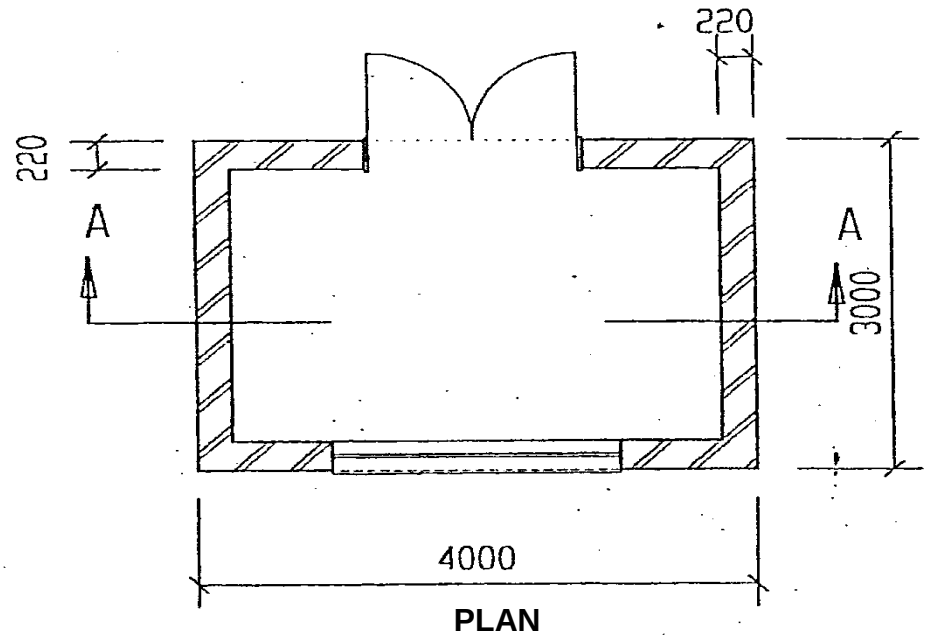

PLAN
SCALE 1 : 50

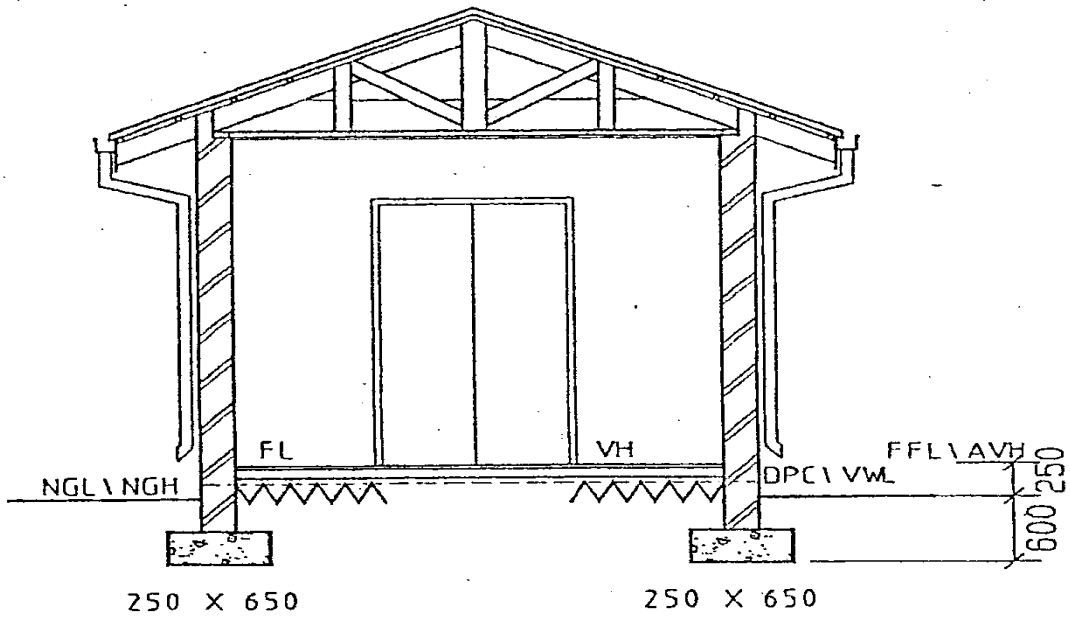

SECTION A–A
SCALE 1 : 50

Copyright reserved