higher education & training

Department:
Higher Education and Training
REPUBLIC OF SOUTH AFRICA

NASIENRIGLYN

NASIONALE SERTIFIKAAT

BOUWETENSKAP N3

30 JULIE 2019

Hierdie nasienriglyn bestaan uit 8 bladsye.

Kopiereg voorbehou

VRAAG 1

1.1 A – Rimpeling, krinkeling of sakking
B – Kruip
C – Blaasvorming
D – Afskilfering of lostrek (4)

1.2

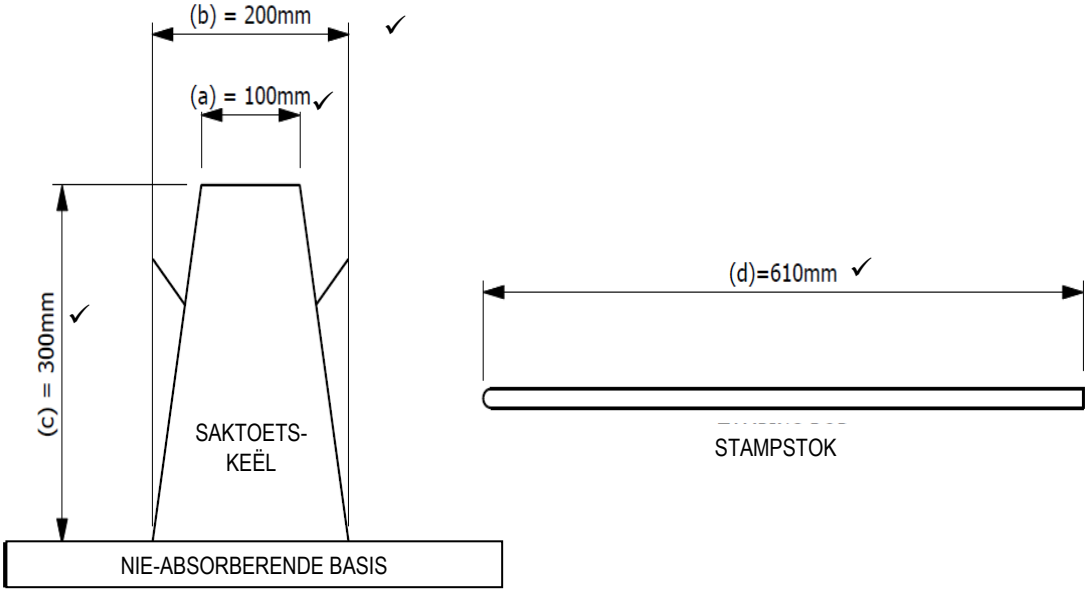

(4)

1.3 Aanvanklike drogingskrimping is die grootste hoeveelheid krimping✓ wat tydens die verhardingsproses plaasvind. (1)

1.4 Om die bewerkbaarheid van 'n vars betonmengsel te bepaal (1)
[10]

VRAAG 2

2.1 2.1.1 Wrywingskoëffisiënt, μ = Wrywingskrag/Normaalkrag✓
= 500/2 000✓
= 0,25✓

2.1.2 Wrywingshoek, $\theta = \tan^{-1} \mu$✓
= tan-1 (0,25)✓
= 14,04°✓

(2 × 3) (6)

2.2 2.2.1 Snelheidsverhouding = Totale getal katrolle✓
= 3 + 2✓
= 5✓

2.2.2 Meganiese voordeel (MA) = Gewig/Krag
= (25 × 9,81✓)/85 ✓
= 2,89✓

2.2.3 Rendement, η = 100✓× MA/VR
= 2.89/5✓
= 57,8%✓

(3 × 3) (9)
[15]

VRAAG 3

3.1 Neem moment om RR

$\Sigma M_{RR} = 0$
10RL = (11.5 × 5) + (4 × 5 × 7,5) + (25Sin45° × 3.5) + (40Sin60° × 2)✓
= 338,65✓
RL = 338,65/10✓
= 33,87 kN✓ (4)

3.2 $\Sigma M_{RL} = 0$
$10RR_V$ = (4 × 5 × 2.5) + (25Sin45° × 6,5) + (40Sin60° × 8) – (1.5 × 5)✓
= 434,53✓
RR_V = 434,53/10✓
= 43,45 kN✓ (4)

3.3 $\Sigma F_H = 0$

RR_H = 25Cos45° – 40Cos60°✓
= -2,32 kN✓ (2)

3.4 $RR = (RR_V^2 + RR_H^2)^{1/2}$
$RR = (2,32^2 + 43,45^2)^{1/2}$✓
$RR = (1893,29)^{1/2}$✓
= 43,51 kN✓ (3)

3.5 Bereken die rigting van die reaksie RR

$Tan\theta = (RR_H/RR_V)$
= (2,32/43,45)✓
$\theta = \tan^{-1}$ (2.32/43.45)✓
= 3,06° NW✓ (3)
[16]

VRAAG 4

AREA (mm^2) vir X_{bar}	AREA (mm^2) vir Y_{bar}
ab = 600 √	wx = 600 √
bc = 250 √	wy = 1250 √
cd = 900 √	yz = 250 √
de = 450 √	

(3½)

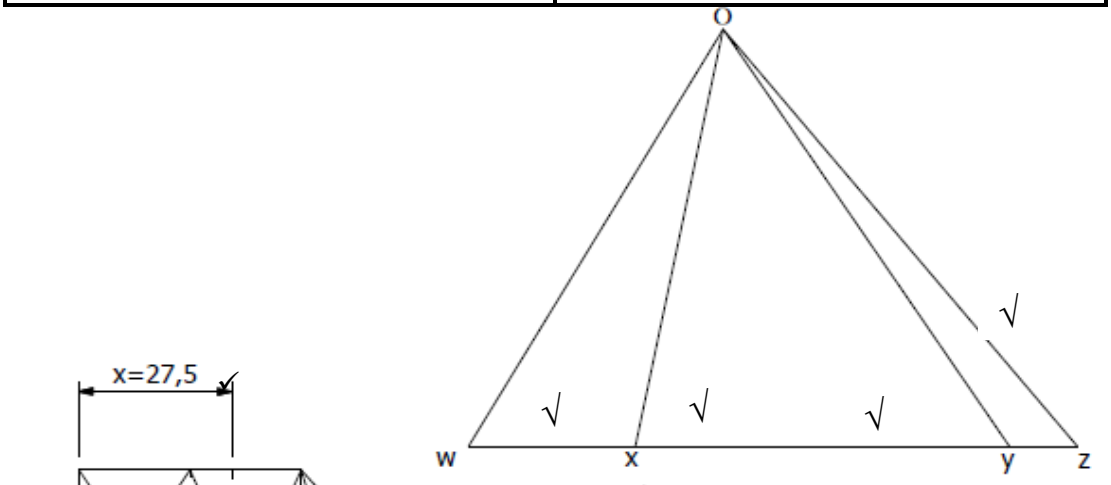

Nasienruit vir funikulêre poligoon (2)	
ox	√
oy	√
oz	√
ow	√

(7)

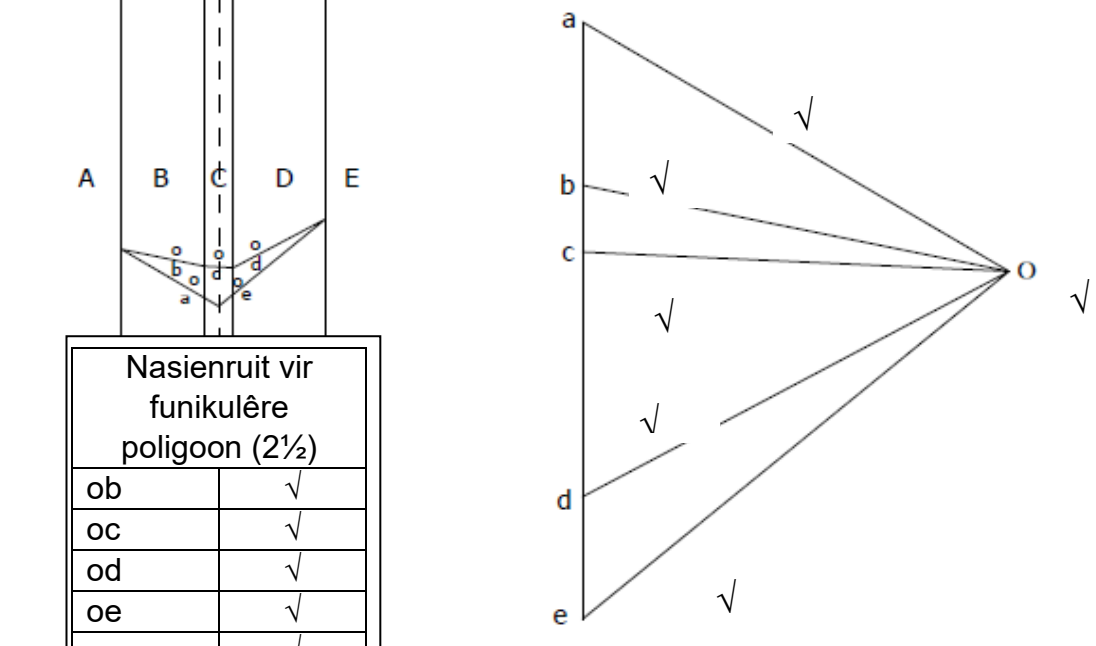

Nasienruit vir funikulêre poligoon (2½)	
ob	√
oc	√
od	√
oe	√
oa	√

(5½)

[16]

OF

ANALITIESE METODE

VORM	AREA	X	Y	AX	AY	
1	30 × 20 = 600 √	10 √	55 √	6000 √	33 000 √	(2½)
2	10 × 25 = 250 √	25 √	12.5 √	6 250 √	3 125 √	(2½)
3	20 × 45 = 900 √	30 √	47,5 √	27 000 √	42 750 √	(2½)
4	0,5 × 45 × 20 = 450 √	46,67 √	47.5 √	21 001.5 √	21 375 √	(2½)
TOTAAL	2 200 ✓			60 251,5 ✓	100 250 ✓	(3)

(13)

ẋ= ΣAX/ΣA√ ẏ = ΣAY/ΣA√

= (60 251,5/2 200)√ = (100 250/2 200)√

= 27,39√ = 45,57√ (3)

[16]

VRAAG 5

5.1 Bereken die grootte van krag Y

$\Sigma M_X = 0$

2RL + 2Y = 4RR

Y = (4RR-2RL)/2√

Vervanging van waardes

= ((4 × 35) – (2 × 20))/2 √

= 50 kN✓ (2)

5.2 Bereken die grootte van krag X

$\Sigma M_Y = 0$

4RL = 2RR + 2X

X = (4RL – 2RR)/√

Vervanging van waardes

= ((4 × 20) – (2 × 35))/2√

= 5 kN✓

OF

$\Sigma F_V = 0$

X +Y = RL +RR

Maar Y = 50 kN

Vervanging van waardes

X = RL +RR –Y √

= 20 + 35 – 50√

= 5 kN✓ (2)

5.3

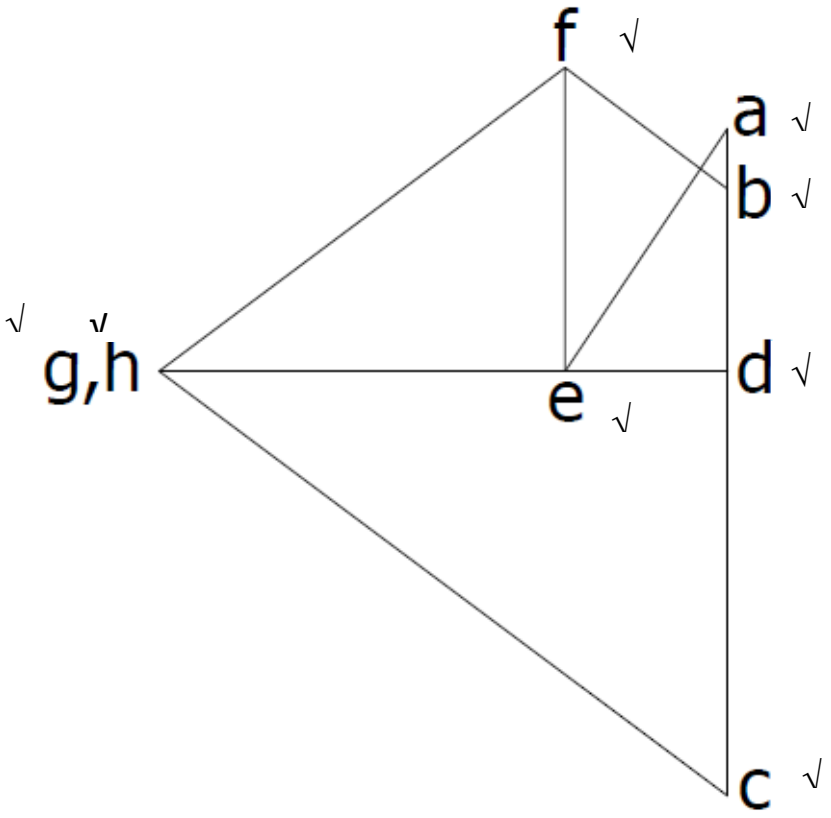

(4)

DEEL	GROOTTE (kN)	AARD
AE	24,0√	STUT√
DE	13,3√	BINT√
EF	25,0√	BINT√
FG	41.7√	STUT√
GH	0√	OORTOLLIG√
DG	46,7√	BINT√
DH	46,7√	BINT√
CH	58,3√	STUT√
BF	16,7√	STUT√

(9)

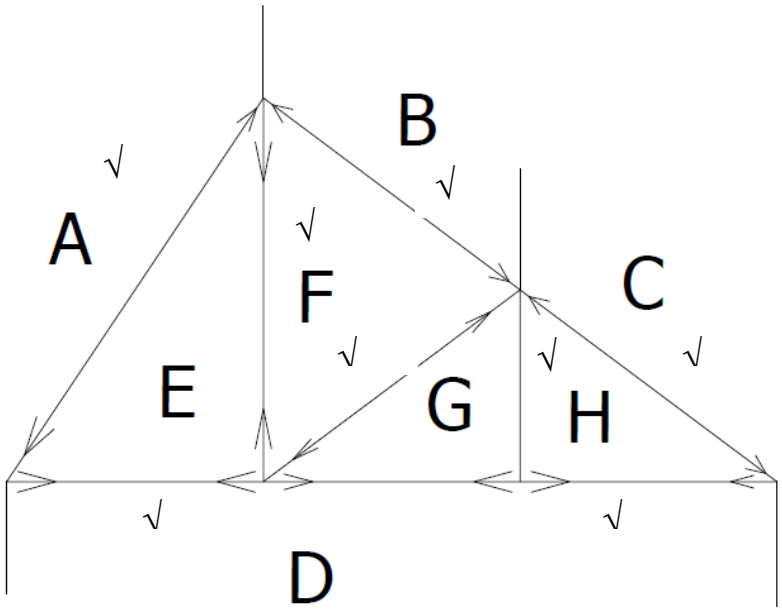

(4)
[21]

VRAAG 6

6.1 P = VI
I = P/V
= 1 500/220✓
= 6,82 A✓ (2)

6.2 V = IR
R = V/I
= 220/6,82✓
= 32,26 Ω✓

OF P = I^2R
R = P/I^2
= 1 500/$6,82^2$✓
= 32,25 Ω✓

OF P = V^2/R
R = V^2/P
= 220^2/1 500✓
= 32,27 Ω✓ (2)

6.3 Die energie wat in 2 uur gebruik is
E = Pt ✓
= 1,5 × 2✓
= 3,0 kWh✓ (3)

6.4 Koste = Daaglikse energieverbruik × tarief × getal dae✓
= 1,5 × 2 × 2 × 30✓
= R180,00✓ (3)
[10]

VRAAG 7

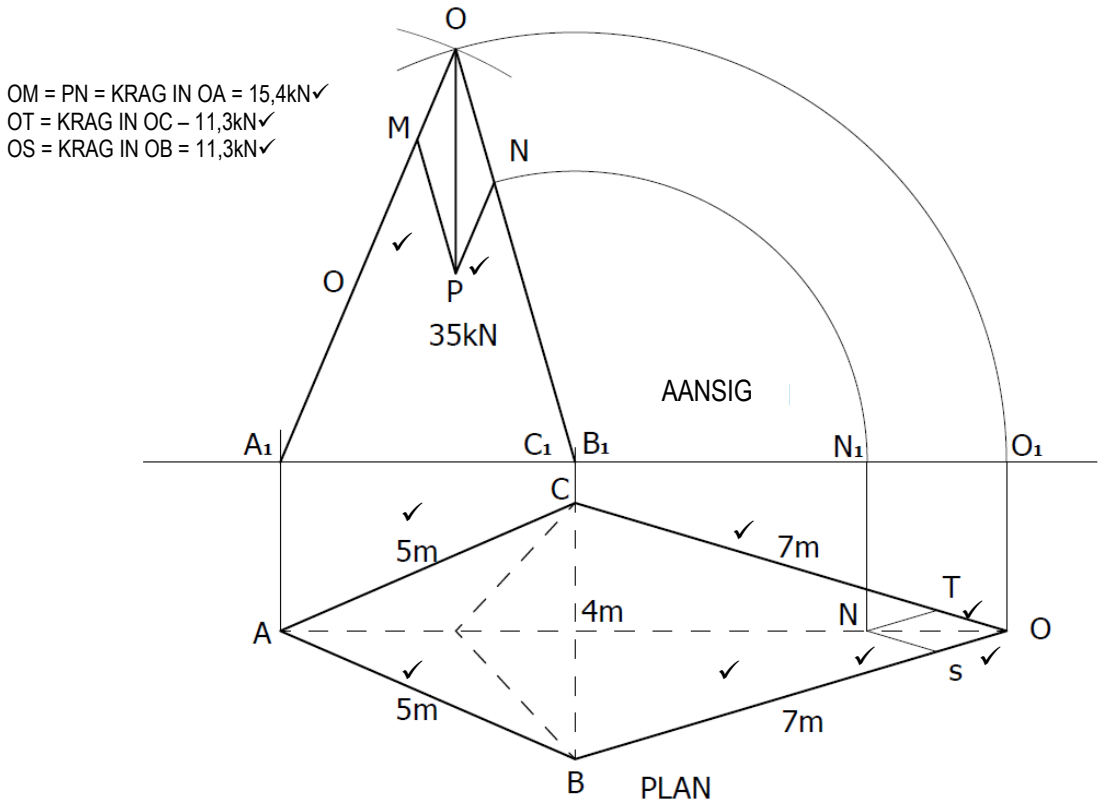

[12]

TOTAAL: 100

Kopiereg voorbehou