higher education & training

Department:
Higher Education and Training
REPUBLIC OF SOUTH AFRICA

MARKING GUIDELINE

NATIONAL CERTIFICATE

BUILDING DRAWING N3

25 JULY 2019

This marking guideline consists of 17 pages.

Copyright reserved

QUESTION 1: BRICKWORK

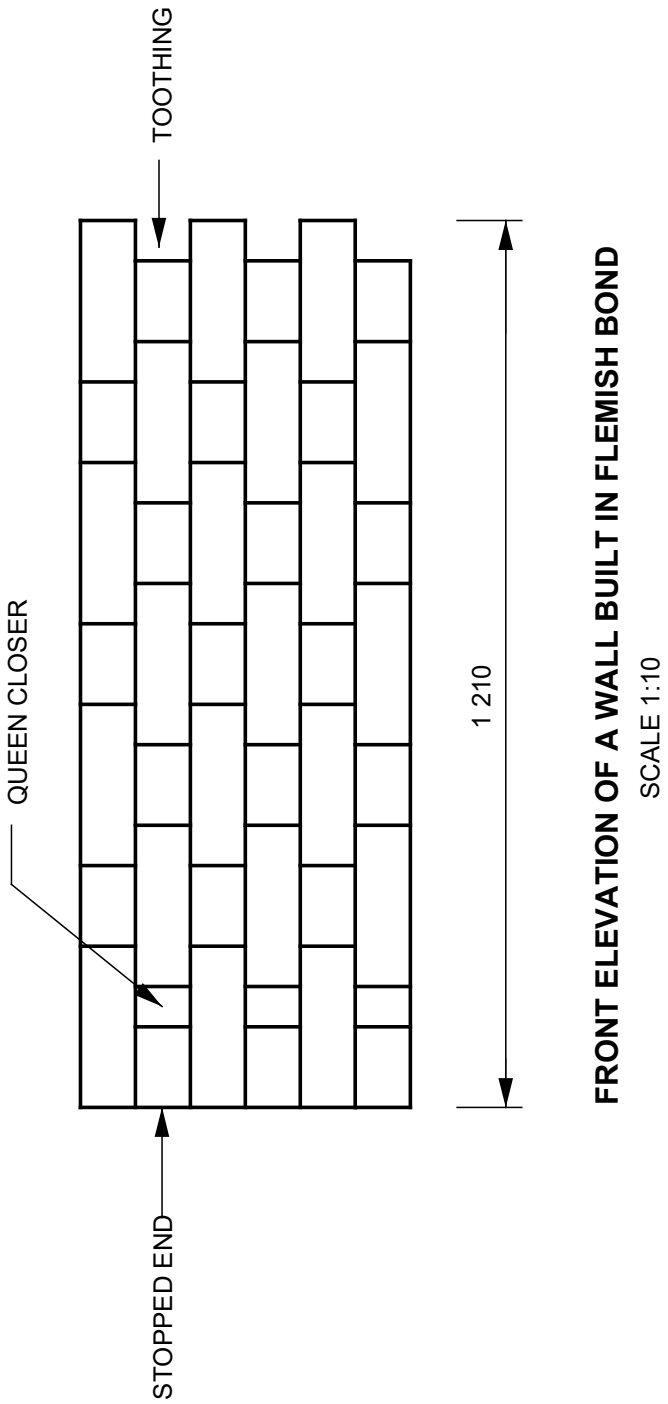

FRONT ELEVATION OF A WALL BUILT IN FLEMISH BOND
SCALE 1:10

RUBRIC FOR QUESTION 1

Part of drawing	Correct position	Correct shape	Hatching	Labels	Total
Wall	1	1		1	3
Bricks	1	1		1	3
Queen closer	1	1		1	3
Bonding	1	1			2
				Title	1
				Scale	1
				Accuracy	1
				Line work	2
				Subtotal	**16**
				Divide by	**2**
				TOTAL:	**8**

SUMMARY QUESTION 1

Marking criteria	Possible mark	Marker	Internal moderator	External moderator
Correct position	4			
Correct shape	4			
Hatching				
Labels	3			
Title	1			
Scale	1			
Accuracy	1			
Line work	2			
Subtotal	**16**			
Divide by	**2**			
TOTAL:	**8**			

NB: If any part of the drawing is drawn in the incorrect position NO marks should be allocated for this part of the drawing. **[8]**

Copyright reserved

QUESTION 2: MASONRY

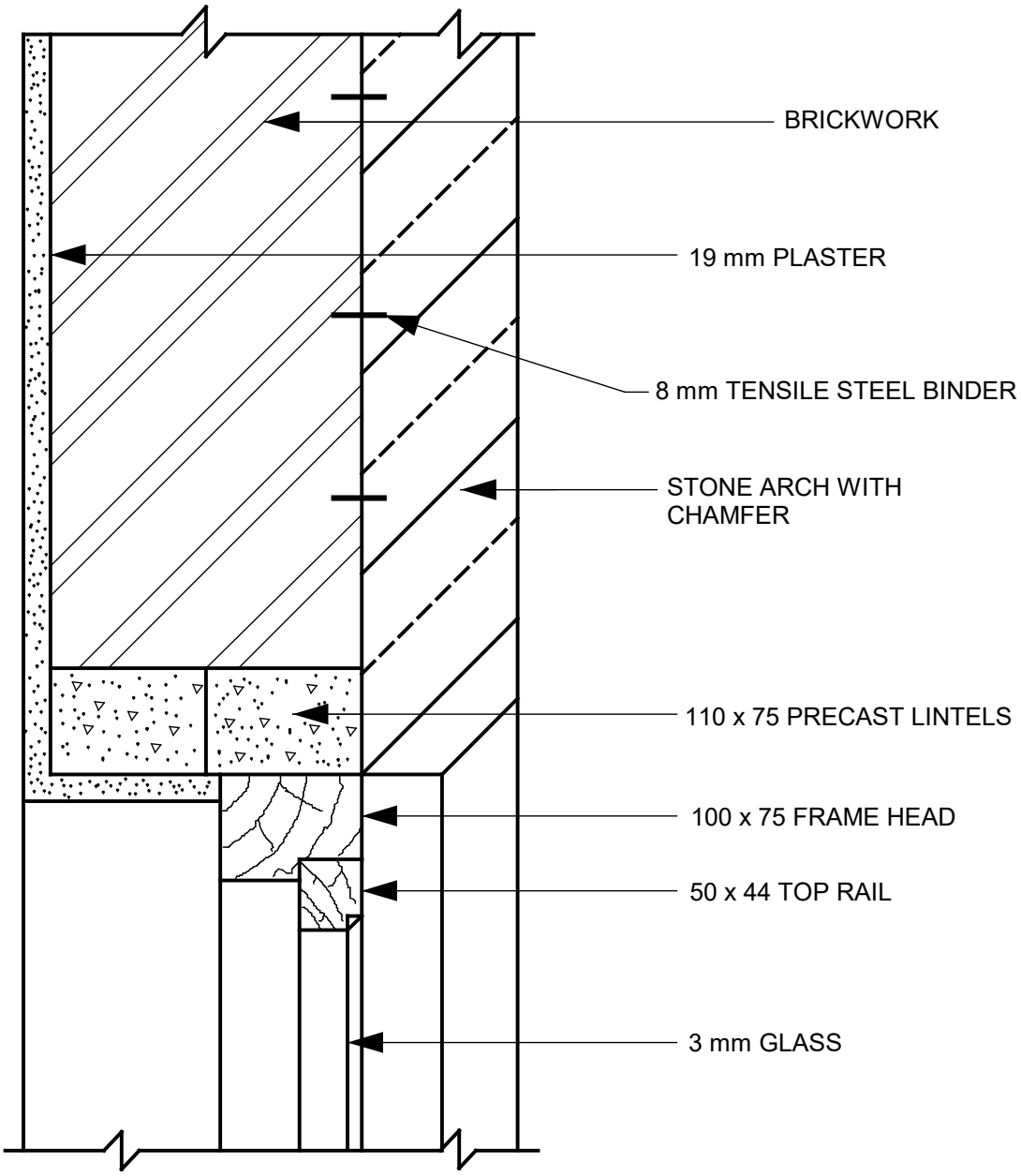

VERTICAL SECTION AT B-B
SCALE 1:5

RUBRIC FOR QUESTION 2

Part of drawing	Correct position	Correct shape	Hatching	Labels	Total
Stonework Bricks Plaster	1	1	1	1	4
External and internal walls	1	1	1	1	4
Frame and stile Top rail Glass	1	1	1	1	4
Ties and DPC	1	1	1	1	4
				Title	1
				Scale	1
				Accuracy	1
				Line work	1
				Subtotal	**20**
				Divide by	**2**
				TOTAL:	**10**

SUMMARY QUESTION 2

Marking criteria	Possible mark	Marker	Internal moderator	External moderator
Correct position	4			
Correct shape	4			
Hatching	4			
Labels	4			
Title	1			
Scale	1			
Accuracy	1			
Line work	1			
Subtotal	**20**			
Divide by	**2**			
TOTAL:	**10**			

NB: If any part of the drawing is drawn in the incorrect position NO marks should be allocated for this part of the drawing. **[10]**

Copyright reserved

QUESTION 3: FLOORS

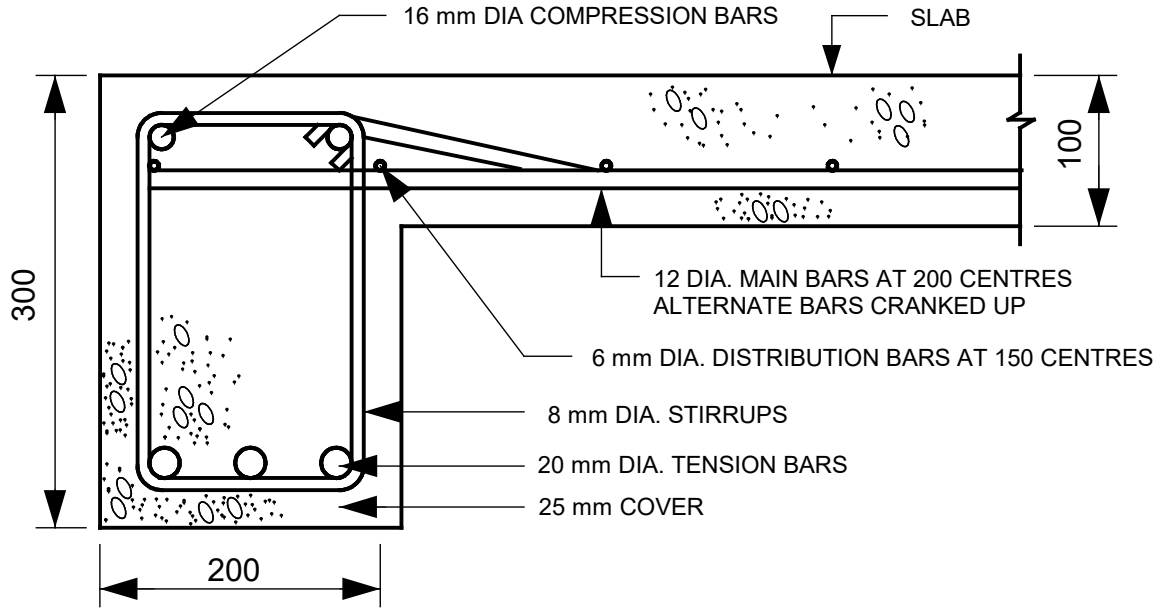

L - BEAM SCALE 1:5

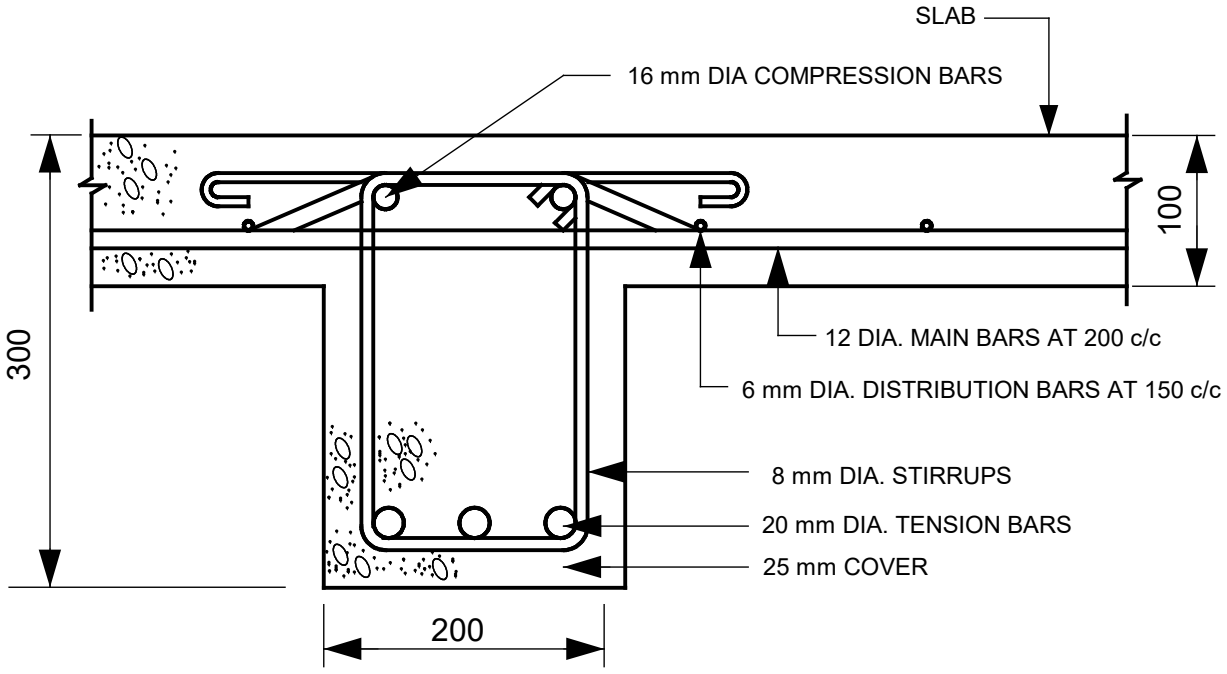

T - BEAM SCALE 1:5

Copyright reserved

RUBRIC FOR QUESTION 3

Part of drawing	Correct position	Correct shape	Hatching	Labels	Total
L-beam Beam and slab	2	2	2	2	8
T-beam Beam and slab	2	2	2	2	8
L-beam Main bars, distribution bars, tension bars, stirrups and cover	4	2		2	8
T-beam Main bars, distribution bars, tension bars, stirrups and cover	4	2		2	8
				Title	1
				Scale	1
				Accuracy	1
				Line work	1
				Subtotal	**36**
				Divide by	**2**
				TOTAL:	**18**

SUMMARY QUESTION 3

Marking criteria	Possible mark	Marker	Internal moderator	External moderator
Correct position	12			
Correct shape	8			
Hatching	4			
Labels	8			
Title	1			
Scale	1			
Accuracy	1			
Line work	1			
Subtotal	**36**			
Divide by	**2**			
TOTAL:	**18**			

[18]

QUESTION 4: ROOFS

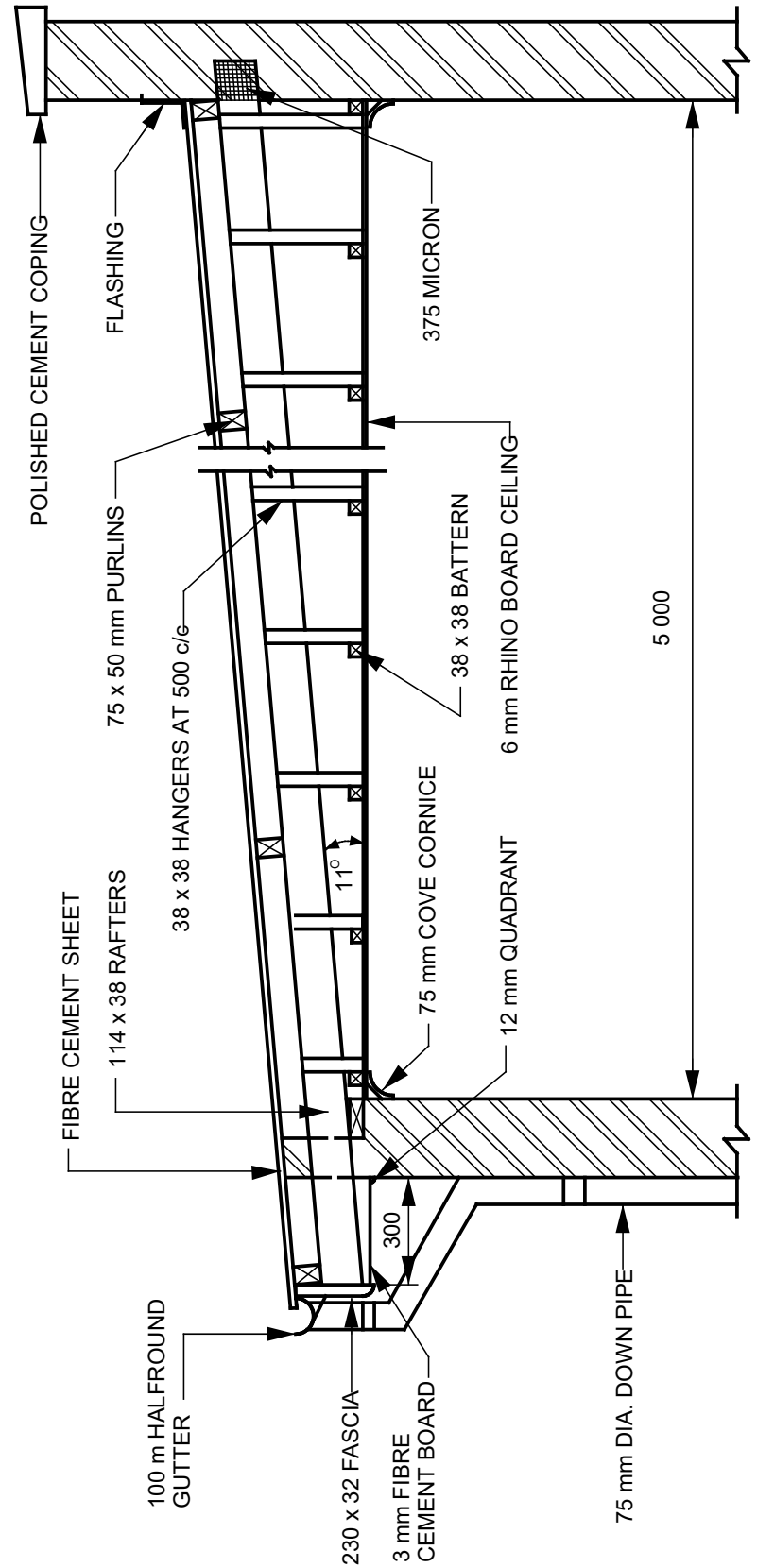

VERTICAL SECTION THROUGH A FLAT ROOF

SCALE 1:20

Copyright reserved

RUBRIC FOR QUESTION 4

Part of drawing	Correct position	Correct shape	Hatching	Labels	Total
Rafters, purlins, sheeting, pitch and flashing	4	2	2	2	10
Battens, hangers, ceiling board and cornice	4	2	2	2	10
Overhang, fibre board, fascia, gutter and downpipe	2	2	2	2	8
Walls and coping	2	2	2	2	8
				Title	1
				Scale	1
				Accuracy	1
				Line work	1
				Subtotal	**40**
				Divide by	**2**
				TOTAL:	**20**

SUMMARY QUESTION 4

Marking criteria	Possible mark	Marker	Internal moderator	External moderator
Correct position	12			
Correct shape	8			
Hatching	8			
Labels	8			
Title	1			
Scale	1			
Accuracy	1			
Line work	1			
Subtotal	**40**			
Divide by	**2**			
TOTAL:	**20**			

NB: If any part of the drawing is drawn in the incorrect position NO marks should be allocated for this part of the drawing. **[20]**

QUESTION 5: STAIRS

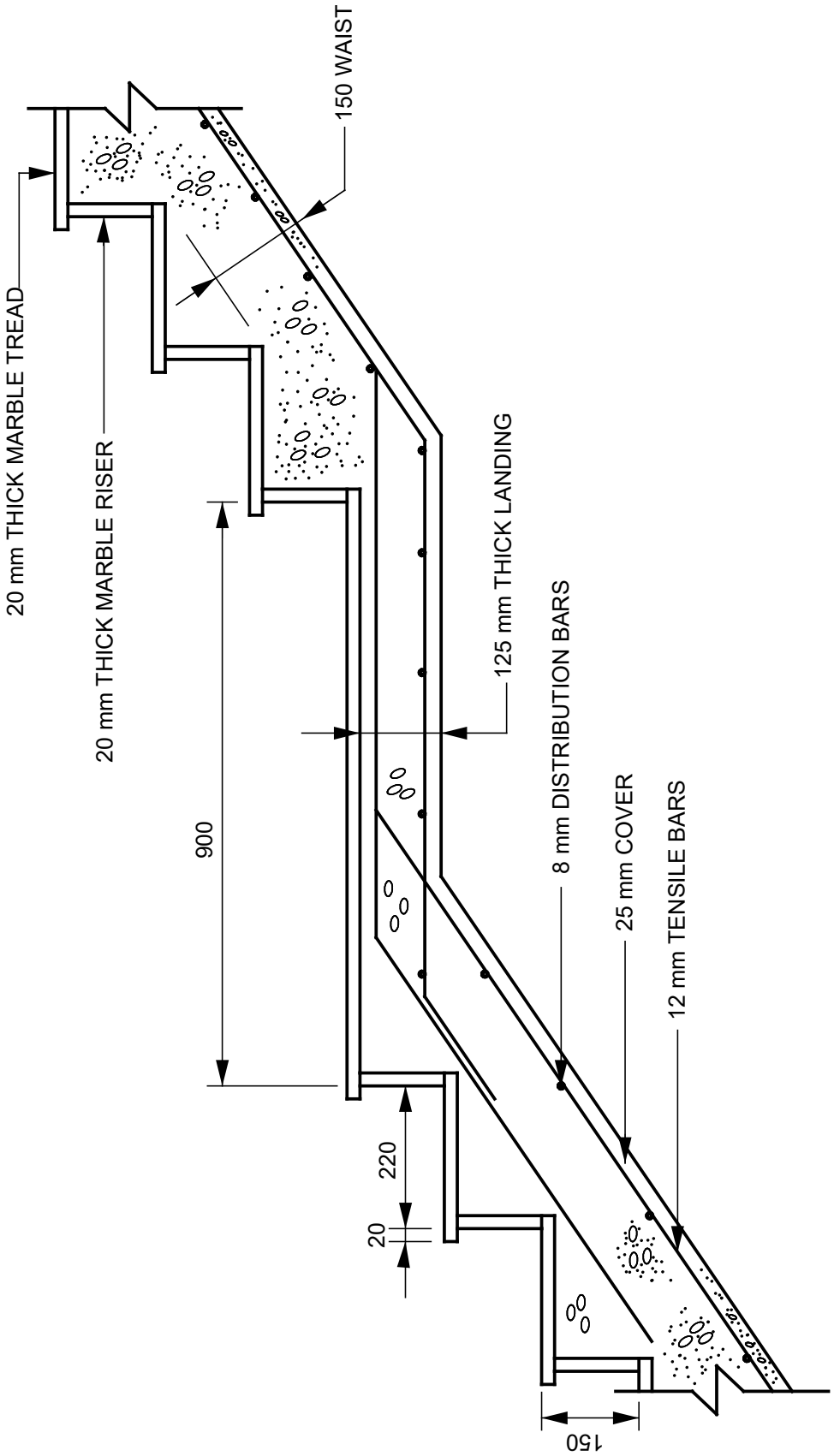

SECTION THROUGH REINFORCED CONCRETE STAIRS

SCALE 1:10

RUBRIC FOR QUESTION 5

Part of drawing	Correct position	Correct shape	Hatching	Labels/ Practicality	Total
Landing, treads and risers	3	2	1	2	8
Waist and cover	3	2		2	7
Distribution and tensile bars	3	2		2	7
Marble balustrade	3	2	1	2	8
				Title	2
				Scale	2
				Accuracy	2
				Line work	2
				Subtotal	**38**
				Divide by	**2**
				TOTAL:	**16**

SUMMARY QUESTION 5

Marking criteria	Possible mark	Marker	Internal moderator	External moderator
Correct position	12			
Correct shape	8			
Hatching	2			
Labels	8			
Title	2			
Scale	2			
Accuracy	2			
Line work	2			
Subtotal	**38**			
Divide by	**2**			
TOTAL:	**16**			

NB: If any part of the drawing is drawn in the incorrect position NO marks should be allocated for this part of the drawing. **[16]**

QUESTION 6: JOINERY

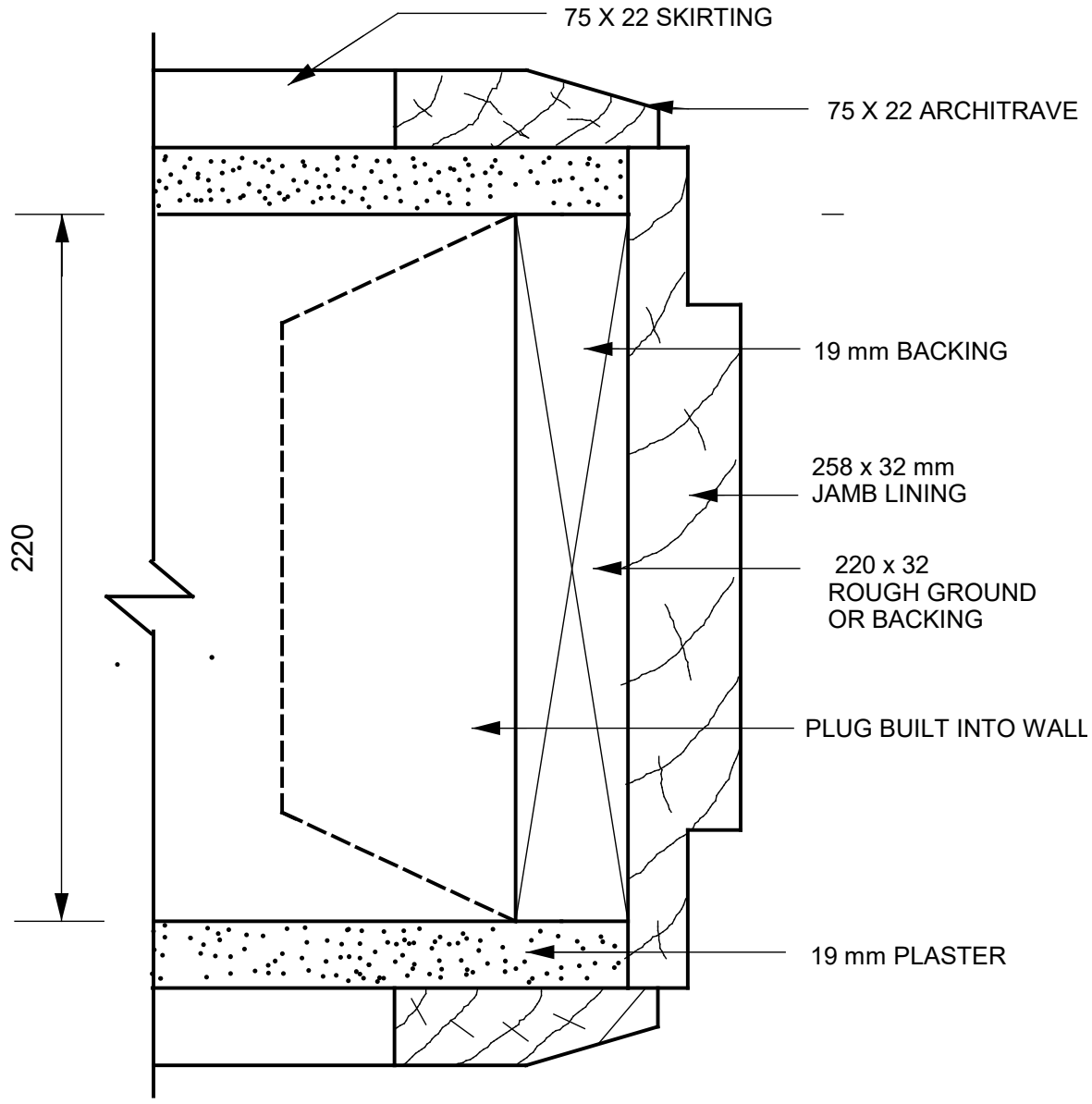

HORIZONTAL SECTION THROUGH A DOUBLE-REBATED SOLID JAMB
SCALE 1:2

RUBRIC FOR QUESTION 6

Part of drawing	Correct position	Correct shape	Hatching	Labels/ Practicality	Total
Wall and plaster	2	1	1	1	5
Backing and wall plug	2	1	1	1	5
Jamb and rebate	2	1	1	1	5
Architrave and skirting balustrade	2	1	1	1	5
				Title	1
				Scale	1
				Accuracy	1
				Line work	1
				Subtotal	**24**
				Divide by	**2**
				TOTAL:	**12**

SUMMARY QUESTION 6

Marking criteria	Possible mark	Marker	Internal moderator	External moderator
Correct position	8			
Correct shape	4			
Hatching	4			
Labels	4			
Title	1			
Scale	1			
Accuracy	1			
Line work	1			
Subtotal	**24**			
Divide by	**2**			
TOTAL:	**12**			

NB: If any part of the drawing is drawn in the incorrect position NO marks should be allocated for this part of the drawing. **[12]**

QUESTION 7: PLUMBING

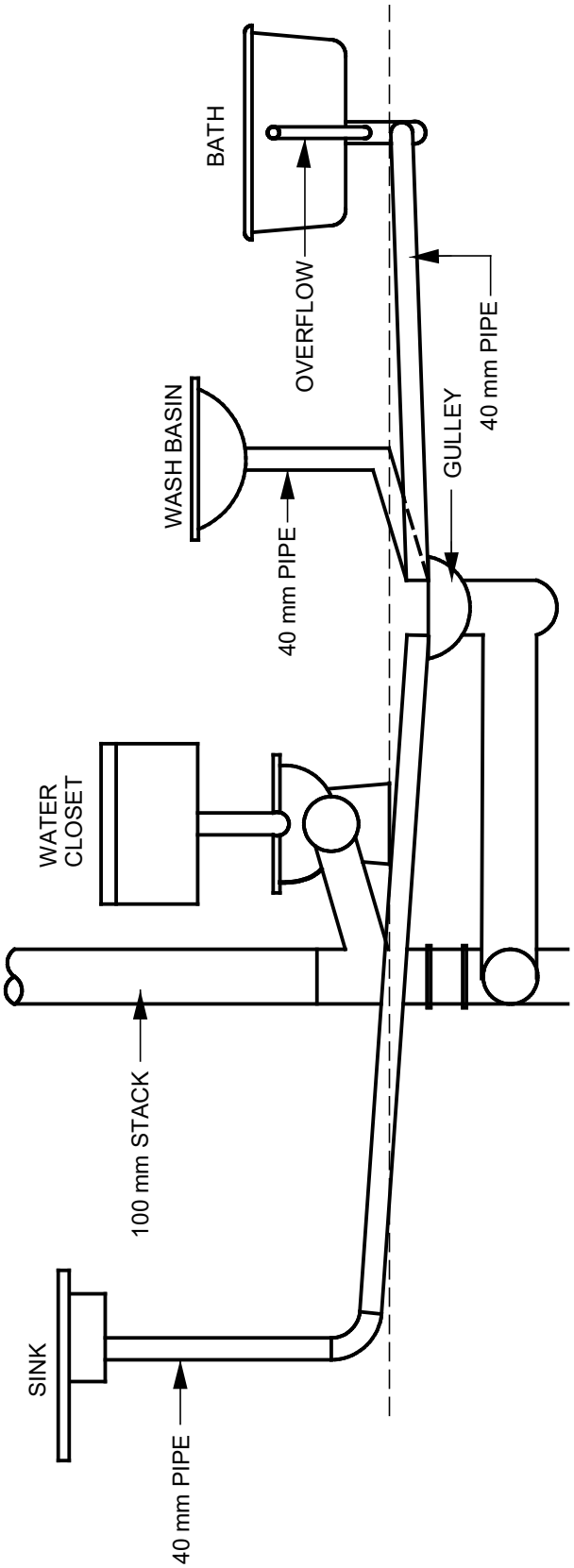

SINGLE STOREY BUILDING STUB STACK PIPE SYSTEM

RUBRIC FOR QUESTION 7

Part of drawing	Correct position	Correct shape	Hatching	Labels	Total
Sink, water closet, wash basin and bath	2	2			4
Sink, water closet, wash basin and bath waste pipes	2	2			4
Gulley and stack	2	2			4
Bath overflow	2	2			4
				Title	1
				Scale	1
				Accuracy	1
				Line work	1
				Subtotal	**20**
				Divide by	**2**
				TOTAL:	**10**

SUMMARY QUESTION 7

Marking criteria	Possible mark	Marker	Internal moderator	External moderator
Correct position	8			
Correct shape	8			
Hatching				
Labels				
Title	1			
Scale	1			
Accuracy	1			
Line work	1			
Subtotal	**20**			
Divide by	**2**			
TOTAL:	**10**			

NB: If any part of the drawing is drawn in the incorrect position NO marks should be allocated for this part of the drawing. **[10]**

Copyright reserved

QUESTION 8: PLASTER CEILINGS

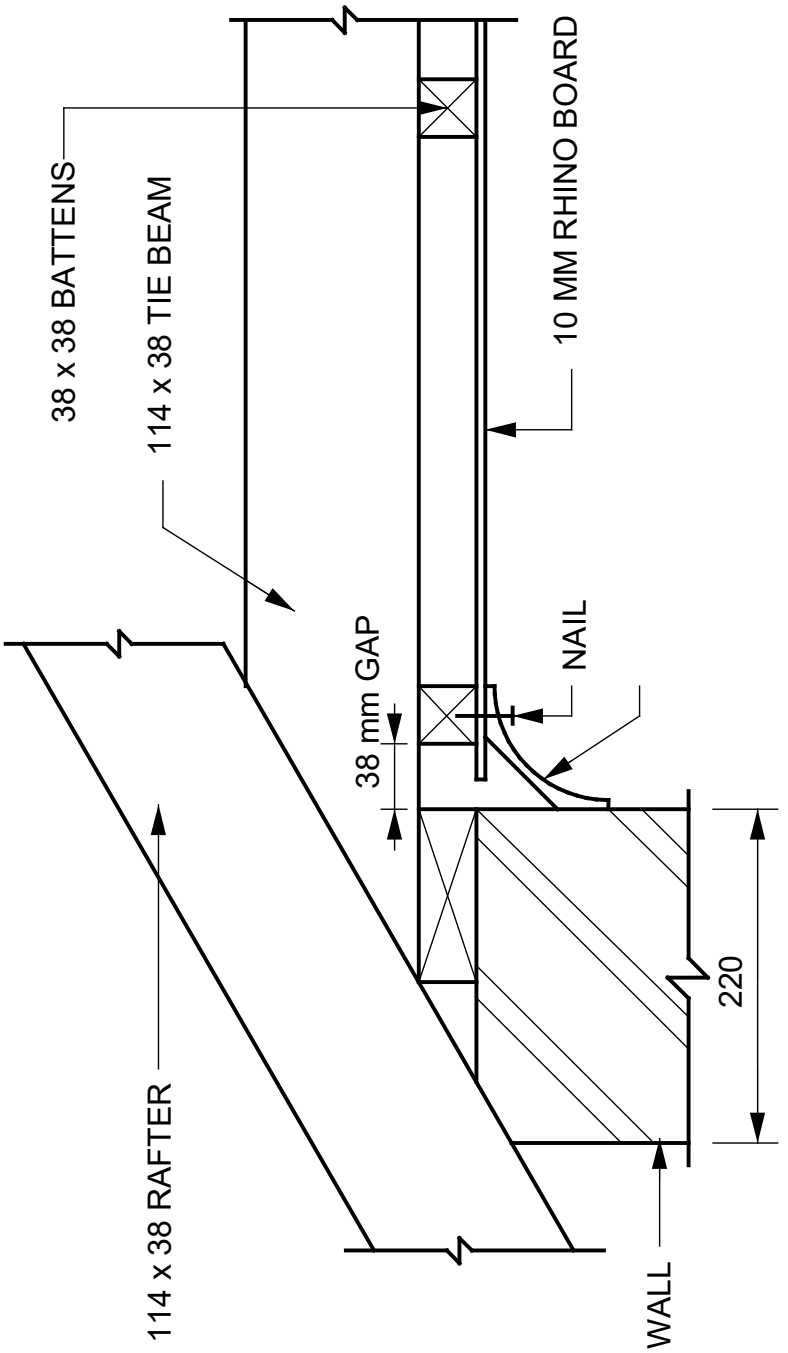

METHOD OF FIXING RHINO BOARD CORNICE

SCALE 1:5

RUBRIC FOR QUESTION 8

Part of drawing	Correct position	Correct shape	Hatching	Labels	Total
Tie beam	1	½	1	½	3
Battens	1	½	1	½	3
Cornice and ceiling board rim	1	½		½	2
Method of fixing	1	½		½	2
				Title	½
				Scale	½
				Accuracy	½
				Line work	½
				Subtotal	**12**
				Divide by	**2**
				TOTAL:	**6**

SUMMARY QUESTION 8

Marking criteria	Possible mark	Marker	Internal moderator	External moderator
Correct position	4			
Correct shape	2			
Hatching	2			
Labels	2			
Title	½			
Scale	½			
Accuracy	½			
Line work	½			
Subtotal	**12**			
Divide by	**2**			
TOTAL:	**6**			

NB: If any part of the drawing is drawn in the incorrect position NO marks should be allocated for this part of the drawing. **[6]**

TOTAL: 100

Copyright reserved