higher education & training

Department:
Higher Education and Training
REPUBLIC OF SOUTH AFRICA

MARKING GUIDELINE

NATIONAL CERTIFICATE

BUILDING DRAWING N3

14 April 2020

This marking guideline consists of 16 pages

QUESTION 1:

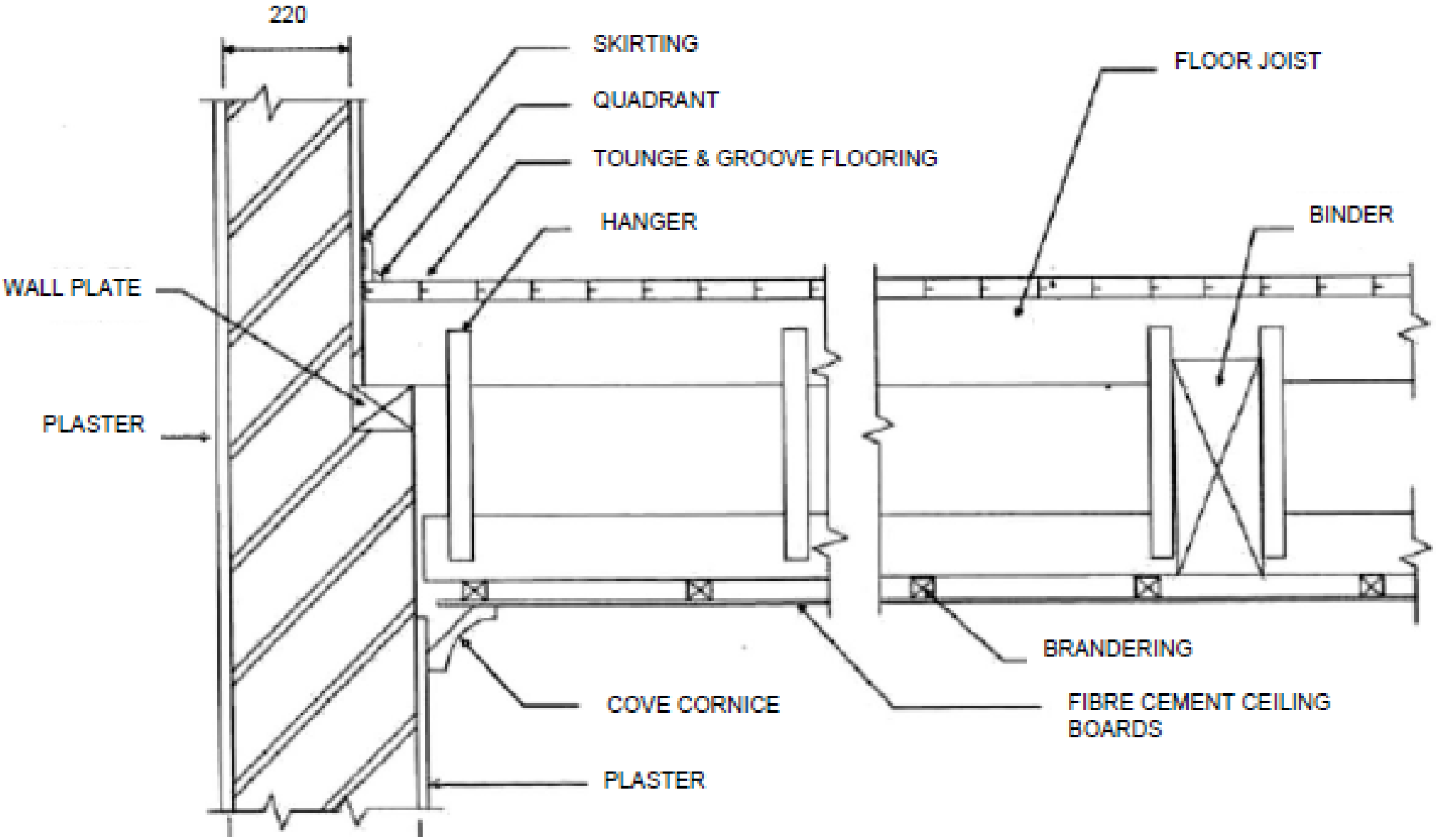
220
SKIRTING
QUADRANT
TOUNGE & GROOVE FLOORING
HANGER
FLOOR JOIST
BINDER
WALL PLATE
PLASTER
BRANDERING
COVE CORNICE
FIBRE CEMENT CEILING BOARDS
PLASTER

QUESTION 1: RUBRIC			
PART OF DRAWING	**MARKING CRITERIA**	**POSSIBLE MARK**	**REMARKS**
Ceiling board, cornice, channel, hangers,	Correct position	4	
	Dimensioning	4	
	Labelling	4	
	Hatching	4	
Floor joist, quadrant, floor finish and skirting	Correct position	4	
	Dimensioning	4	
	Labelling	4	
	Hatching	4	
Wall, tie and plaster	Correct position	2	
	Dimensioning	2	wall and plaster
	Labelling	3	
	Hatching	2	wall and plaster
DPC and brick force	Correct position	3	
	Dimensioning	1	regulation
	Labelling	3	
	Hatching	2	ground level
	Subtotal	50	
	Divide by	3.125	
Overall correctness		**16**	
Overall impression		**2**	
Title		**1**	
Scale		**1**	
TOTAL:		**20**	

SUMMARY QUESTION 1

Marking criteria	Possible mark	Marker	Internal moderator	External moderator
Correct position	13			
Dimensions	11			
Labels	14			
Hatching	12			
Subtotal	**50**			
Divide by	**3.125**			
Overall correctness	**16**			
Overall impression	**2**			
Title	**1**			
Scale	**1**			
TOTAL:	**20**			

QUESTION 2

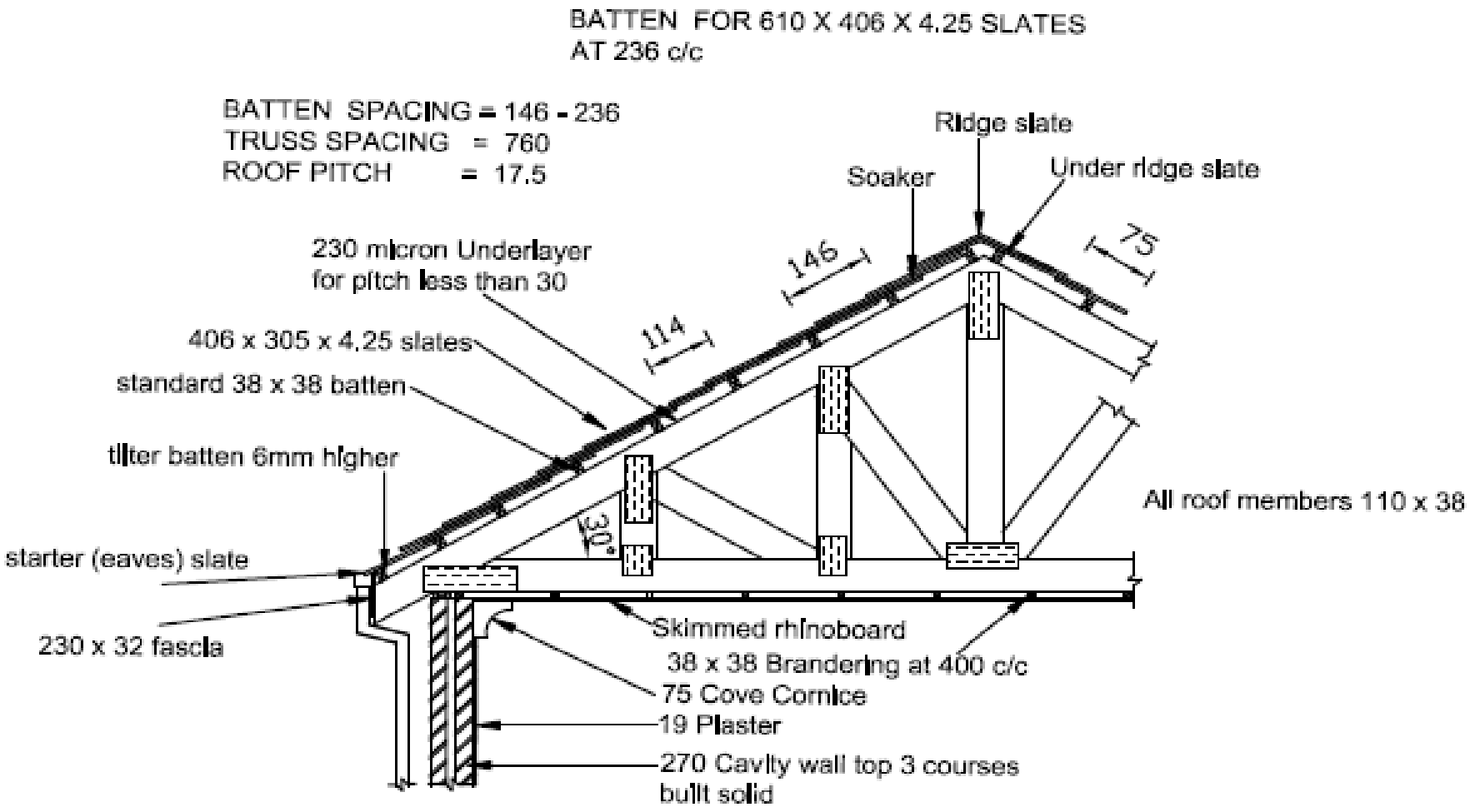

VERTICAL SECTION THROUGH A FIBRE CEMENT ROOF TILES
SCALE 1:10

QUESTION 2: RUBRIC			
PART OF DRAWING	**MARKING CRITERIA**	**POSSIBLE MARK**	**REMARKS**
Pitch, rafter, tie beam and wall plate	Correct position	4	
	Dimensioning	4	
	Labelling	4	
	Hatching	1	Wall plate
Slates, battens and tilting fillet	Correct position	3	
	Dimensioning	3	
	Labelling	3	
	Hatching	1	Battens
Gutter, boarding, lining, boarding cleat and flashing	Correct position	6	
	Dimensioning	2	Gutter and boarding
	Labelling	6	
	Hatching		
Brandering, ceiling board and cornice	Correct position	3	
	Dimensioning	3	
	Labelling	3	
	Hatching	1	Brandering
Wall, plaster	Correct position	3	
	Dimensioning	3	
	Labelling	3	
	Hatching	2	
	Subtotal	58	
	Divide by	3.63	
Overall correctness		**16**	
Overall impression		**2**	
Title		**1**	
Scale		**1**	
TOTAL		**20**	

SUMMARY QUESTION 2

Marking criteria	Possible mark	Marker	Internal moderator	External moderator
Correct position	19			
Dimensions	15			
Labels	19			
Hatching	5			
Subtotal	**58**			
Divide by	**3.63**			
Overall correctness	**16**			
Overall impression	**2**			
Title	**1**			
Scale	**1**			
TOTAL	**20**			

QUESTION 3

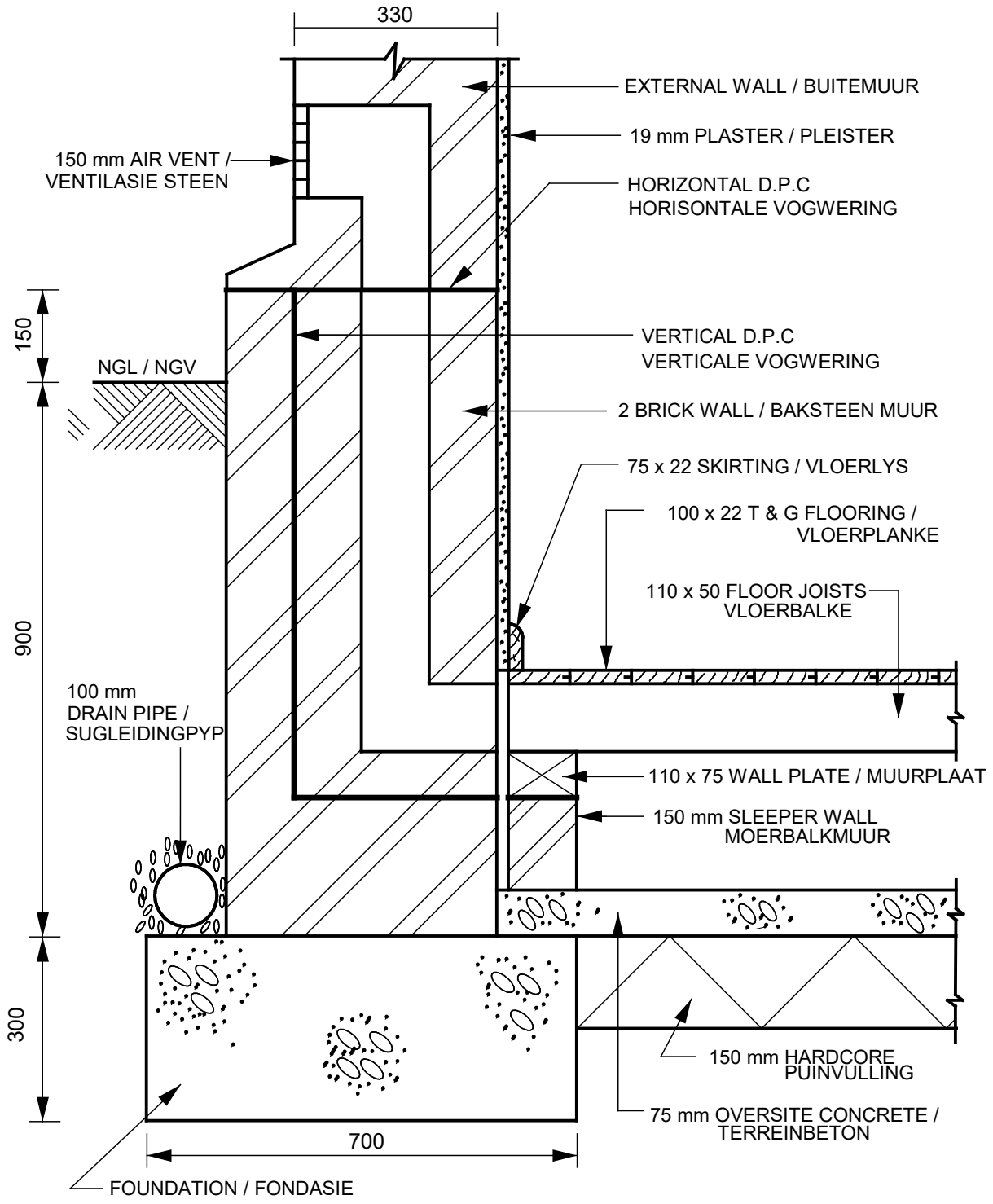

VERTICAL SECTION THROUGH BASEMENT SUSPENDED FLOOR

SCALE 1 : 10

QUESTION 3: RUBRIC			
PART OF DRAWING	**MARKING CRITERIA**	**POSSIBLE MARK**	**REMARKS**
Foundation	Correct position	1	
	Dimensioning	2	
	Labelling	1	
	Hatching	1	
Oversite concrete and hardcore	Correct position	2	
	Dimensioning	2	
	Labelling	2	
	Hatching	2	
External wall, ventilated shaft, vertical DPC, horizontal DPC, air vent and natural ground level	Correct position	6	
	Dimensioning	5	Not for NGL
	Labelling	6	
	Hatching	2	Wall and NGL
Sleeper wall, wall plate, floor joist, flooring, plaster and skirting	Correct position	6	
	Dimensioning	6	
	Labelling	6	
	Hatching	3	Flooring, plaster and skirting
Drainpipe	Correct position	1	
	Dimensioning	1	
	Labelling	1	
	Hatching	1	Surrounding area
	Subtotal	57	
	Divided by	4,4	
Overall Correctness		**13**	
Line work		**5**	
Accuracy		**4**	
Balanced layout and neatness		**3**	
TOTAL		**25**	

SUMMARY QUESTION 3

Marking criteria	Possible mark	Marker	Internal moderator	External moderator
Correct position	16			
Dimensions	16			
Labels	16			
Hatching	9			
Subtotal	**57**			
Divided by	**4,4**			
Overall correctness	**13**			
Line work	**5**			
Accuracy	**4**			
Balanced layout and neatness	**3**			
TOTAL	**25**			

[25]

BUILDING DRAWING N3

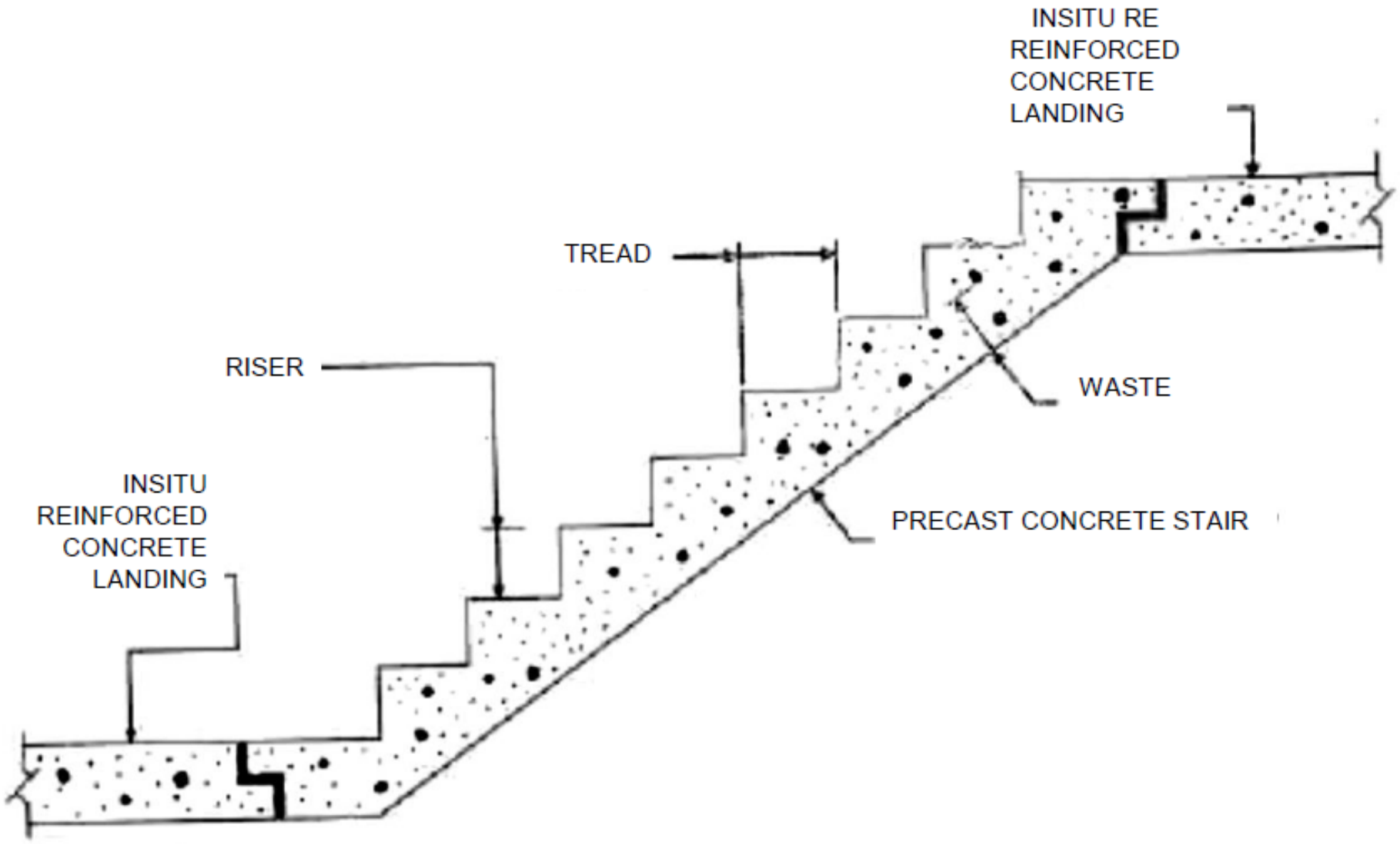

QUESTION 4: RUBRIC			
PART OF DRAWING	**MARKING CRITERIA**	**POSSIBLE MARK**	**REMARKS**
Tread	Correct position	1	
	Dimensioning	1	
	Labelling	1	
	Hatching		
Rise	Correct position	1	
	Dimensioning	1	
	Labelling	1	
	Hatching		
Waist	Correct position	1	
	Dimensioning	1	
	Labelling	1	
	Hatching		
Landing, floor and bearing nib	Correct position	3	
	Dimensioning	3	
	Labelling	3	
	Hatching		
	Subtotal	18	
	Divided by	4,5	
Overall correctness		**4**	
Line work		**2**	
Accuracy		**2**	
Balanced layout and neatness		**2**	
TOTAL		**10**	

SUMMARY QUESTION 4

Marking criteria	Possible mark	Marker	Internal moderator	External moderator
Correct position	6			
Dimensions	6			
Labels	6			
Hatching				
Subtotal	**18**			
Divided by	**4,5**			
Overall correctness	**4**			
Line work	**2**			
Accuracy	**2**			
Balanced layout and neatness	**2**			
TOTAL	**10**			

[10]

QUESTION 5

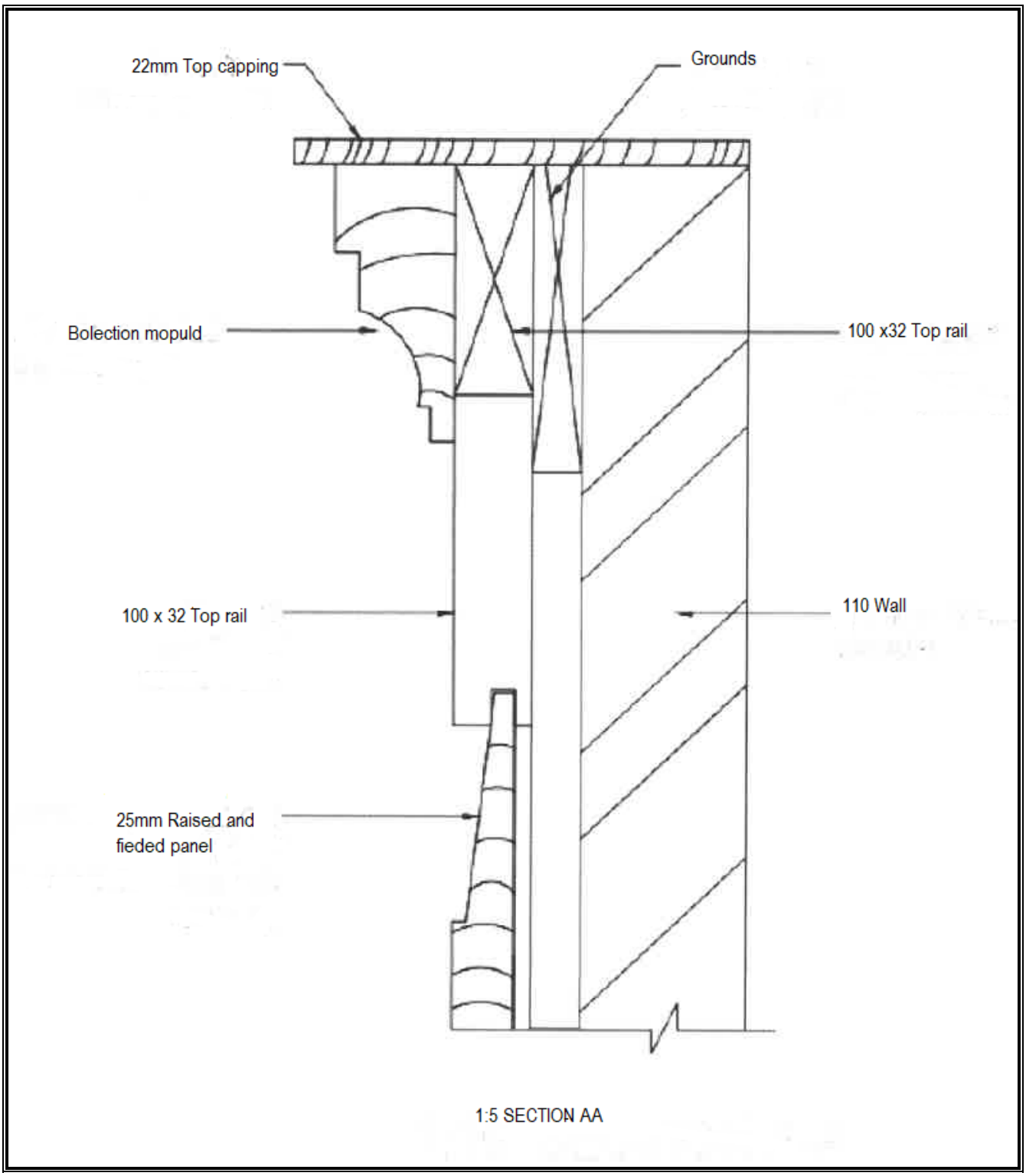
22mm Top capping
Grounds
Bolection mopuld
100 x32 Top rail
100 x 32 Top rail
110 Wall
25mm Raised and
fieded panel
1:5 SECTION AA

QUESTION 5: RUBRIC			
PART OF DRAWING	**MARKING CRITERIA**	**POSSIBLE MARK**	**REMARKS**
Wall and capping	Correct position	2	
	Correct shape	1	
	Labelling	2	
	Hatching		
Grounds	Correct position	1	
	Correct shape	1	
	Labelling	1	
	Hatching	1	
Head rail and top rail	Correct position	2	
	Correct shape	1	
	Labelling	1	
	Hatching	1	
Raised and fielded panel	Correct position	1	
	Correct shape	1	
	Labelling	1	
	Hatching	1	
	Subtotal	18	
	Divided by	2	
	Title and scale	**1**	
	Line work	**1**	
	Accuracy	**1**	
	TOTAL	**12**	

SUMMARY QUESTION 5

Marking criteria	Possible mark	Marker	Internal moderator	External moderator
Correct position	6			
Correct shape	4			
Labels	3			
Hatching	5			
Subtotal	**18**			
Divided by	**2**			
Title and scale	**1**			
Line work	**1**			
Accuracy	**1**			
TOTAL	**12**			

[12]

QUESTION 6

6.1 Flushed

6.2 Flashing

6.3 P-Trap

6.4 Gravitation

6.5 Sewage

[5]

QUESTION 7: APPLICATION OF VARNISH TO NEW WOOD

- Sand down wood with fine (100 grit) sand paper.
- Apply one coat of sanding sealer.
- Fill knots and holes with matching wood filler.
- Apply first coat of varnish.
- Sand down wood with finer (120 grit) sand paper.
- Apply second coat of varnish.
- Sand down wood with finer (220 grit) sand paper
- Apply final coat of varnish.
- Application can be done by brush or spray.
- Let each coat of varnish dry before sanding. (8 × 1) **[8]**

TOTAL: 100

Copyright reserved