higher education & training

Department:
Higher Education and Training
REPUBLIC OF SOUTH AFRICA

T140**(E)**(N14)T

NOVEMBER EXAMINATION

NATIONAL CERTIFICATE

BUILDING DRAWING N1

(8090001)

14 November 2016 (X-Paper)
09:00–13:00

REQUIREMENTS: **One A2 drawing sheet**

Candidates may use drawing instruments.

This question paper consists of 7 pages.

Copyright reserved

DEPARTMENT OF HIGHER EDUCATION AND TRAINING
REPUBLIC OF SOUTH AFRICA

NATIONAL CERTIFICATE
BUILDING DRAWING N1
TIME: 4 HOURS
MARKS: 100

INSTRUCTIONS AND INFORMATION

1. Answer ALL the questions.
2. Read ALL the questions carefully.
3. Number the answers according to the numbering system used in this question paper.
4. Use BOTH sides of the drawing paper.
5. ALL the drawings should be fully dimensioned and neatly finished off with descriptive titles and notes to conform to the SANS Recommended Practice for Building Drawings.
6. A balanced layout must be maintained.
7. Use your own discretion where dimensions are not given.
8. ALL the drawings must be drawn to the required scale.
9. Refer to the mark allocation at the end of each question for the breakdown of your answers.
10. ALL work you do not want to be marked must be clearly crossed out.
11. Write neatly and legibly.

Copyright reserved

QUESTION 1

Draw an isometric view of a king closer brick.

Show your preferred view. Do NOT show any hidden details.

Use scale 1 : 2.

MARKING CRITERIA	POSSIBLE MARK
CORRECTNESS	3
DIMENSIONS	3
NEATNESS OF LAYOUT	2
SCALE	2
TOTAL	10

[10]

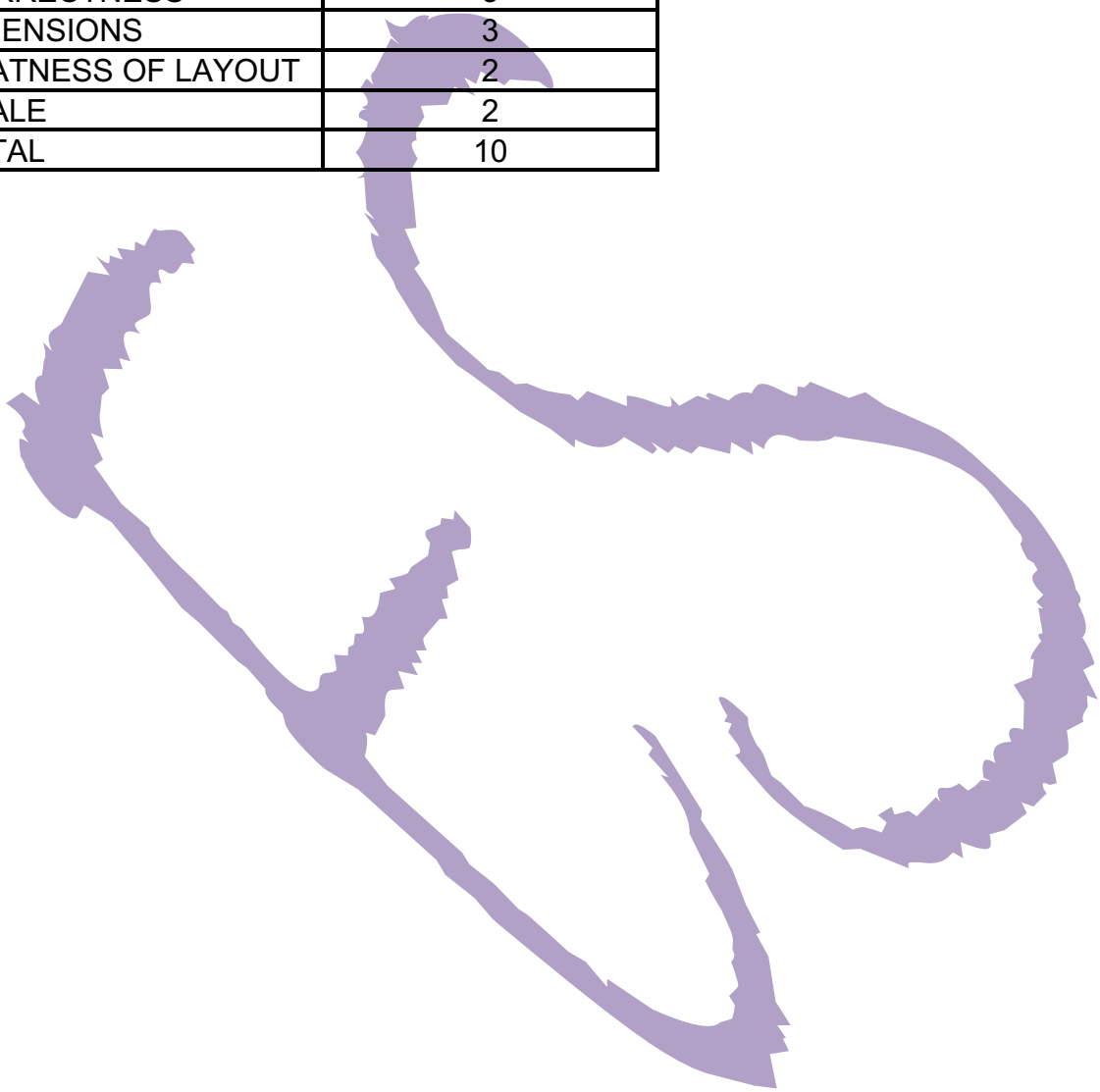

QUESTION 2

FIGURE 1 shows a pictorial view of a wooden block. Do NOT copy the given view but draw full size, in first-angle orthographic projection, the following THREE views of the block:

A front view as seen in the direction of arrow 'A'
A front view as seen in the direction of arrow 'B'
A front view as seen in the direction of arrow 'C'

Use scale 1 : 1.

Dimension the THREE views and print centrally beneath the layout the title and scale.

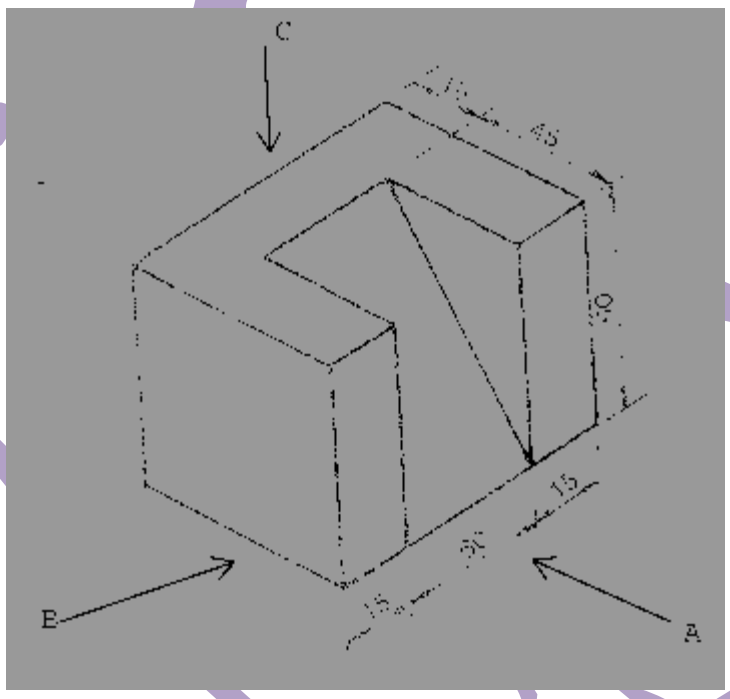

MARKING CRITERIA	POSSIBLE MARK
FRONT VIEW	5
LEFT VIEW	5
TOP VIEW	5
NEATNESS OF LAYOUT	3
SCALE	2
TOTAL	20

[20]

Copyright reserved

QUESTION 3

Draw to a scale 1 : 10, the alternate plan of a right-angled corner, one brick wide, built in English bond.

MARKING CRITERIA	POSSIBLE MARK
BRICK PATTERN	3
ACCURACY	2
CORRECTNESS	1
NEATNESS OF LAYOUT	2
LABELS	1
SCALE	1
TOTAL	10

[10]

QUESTION 4

Draw FOUR rectangles of 80 mm × 50 mm and show the following hatching symbols:

- Fibreboard
- Undisturbed earth
- Wrot wood
- Plywood

(4 × 4) **[16]**

QUESTION 5

Draw a vertical cross section through an external one-brick wall of a dwelling with the following details:

SUBSTRUCTURE
- 700 mm × 250 mm strip foundation
- 100 mm solid concrete floor
- 150 mm hard core
- DPC
- 25 mm screed
- 10 mm thick floor tiles
- 76 mm × 22 mm skirting
- 19 mm plaster

SUPERSTRUCTURE
114 mm × 38 mm tie beam
114 mm × 38 mm rafter
38 mm × 28 mm brandering
229 mm × 28 mm flush fascia board (no overhang)
10 mm Rhino board
114 mm × 38 mm wall plate

Scale: 1 : 10

NOTE: Do NOT indicate any roof covering.

MARKING CRITERIA	POSSIBLE MARK
700 mm × 250 mm strip foundation	2
100 mm solid concrete floor	2
150 mm hard core	2
DPC	2
25 mm screed	2
10 mm thick floor tiles	2
76 mm × 22 mm skirting	2
19 mm plaster	2
114 mm × 38 mm tie beam	1
114 mm × 38 mm rafter	1
38 mm × 28 mm brandering	1
229 mm × 28 mm flush fascia board (no overhang)	1
10 mm Rhino board	1
114 mm × 38 mm wall plate	1
ACCURACY	2
CORRECTNESS	2
NEATNESS OF LAYOUT	2
SCALE	2
TOTAL	30

[30]

Copyright reserved

QUESTION 6

Draw a horizontal cross section of a steel casement window.

Show the following details:

- A portion of the adjacent brick opening
- Internal plaster
- Steel fixing lug
- Steel casement style
- 3 mm glass
- Sealing compound (putty)

Scale: 1 : 1

NOTE: Show only ONE side of the opening.

MARKING CRITERIA	POSSIBLE MARK
• A portion of the adjacent brick opening • Steel fixing lug	1
Internal plaster	1
Steel casement	1
Style	1
3 mm glass	1
Sealing compound (putty)	1
ACCURACY	2
CORRECTNESS	2
NEATNESS OF LAYOUT	2
SCALE	2
TOTAL	14

[14]

TOTAL: 100

Copyright reserved